FLEXIBLE JAW AND PIN & BUSH COUPLINGS
TYPES AND OPERATING DESCRIPTION

Properties of flexible jaw and pin & bush couplings

Product	**ROTEX®**	**POLY-NORM®**	**POLY**	**REVOLEX®**
Type	Torsionally flexible jaw coupling			Torsionally flexible pin & bush coupling
Features				
Torsionally flexible	●	●	●	●
Damping vibrations	●	●	●	●
Maintenance-free	●	●	●	●
Axial plug-in	●	●	●	●
Shear type			●	
Fail-safe	●	●		●
Compensating for misalignment	●	●	●	●
Types				
Variant diversity	very high	average	average	high
Special features	extensive basic programme available from stock while customised solutions can be realized	basic programme available from stock	basic programme available from stock	extensive programme, ideal for customised solutions, for applications with high performances
Applications / core industries	manifold applications, applicable in all industries	pump industry, industrial gearboxes	chemical pumps, high-pressure pumps, ...	industrial gearboxes, conveyor systems, industrial fans, cableways, agitators, generators, ...
surface	allover machining, very good dynamic properties	shell surface machined	shell surface machined	allover machining, good dynamic properties
Torque range T_{KN} [Nm]				
Min.	1	40	42	4300
Max.	35,000	67,000	6,100	1,350,000
Max. circumferential speed v [m/s]				
Cast EN-GJL (dynamic balancing)	35	35	35	35
Steel + cast EN-GJS (dynamic balancing)	60			60
Hub materials available				
Steel (semi-finished product) » customised solutions available	●			●
Cast iron (GJL) » subject to mould	●	●	●	●
Nodular iron (GJS) » subject to mould	●	○		○
Aluminium wrought products (Al-H) » customised solutions available	●			
Aluminium diecast (Al-D)	●			
Stainless steel	●			
Corrosion-protected types	●	○	○	●
Spiders / elastomers				
Material	T-PUR®, PA, PEEK, Hytrel, ...	NBR (up to size 180) T-PUR® (from size 200)	NBR	NR, NBR NBR electrically insulating
Degree of hardness	flexible to torsionally rigid	flexible	flexible	flexible
Temperature range in °C, min. / max. (standard)	- 50 / + 120	- 30 / + 80	- 30 / + 80	- 30 / + 80
Temperature range in °C, min. / max. (special)	- 50 / + 250	- 30 / + 80	- 30 / + 80	- 50 / + 80

● ≈ Standard
○ ≈ On request

FLEXIBLE JAW AND PIN & BUSH COUPLINGS TYPES AND OPERATING DESCRIPTION

Product finder of jaw and pin & bush couplings

Product	**ROTEX®**	**POLY-NORM®**	**POLY**	**REVOLEX®**
Type	Torsionally flexible jaw coupling			Torsionally flexible pin & bush coupling
Geometries				
Design	compact	short	short	short
Mass moment of inertia	low	average	high	average
Shaft distance dimension	low / average	low	low	low
Types (extract)				
Elastomers can be radially disassembled » with no need of displacing driving/driven side	AFN, AH, SH, ZR, DF, DFN, CF-H	ADR, ADR-SB	PKD	Standard
Intermediate shaft types » bridging larger shaft distances	ZR, ZWN	–	–	customised
Standard spacers 100 mm to 250 mm	ZS-DKM-H	AZR	PKA	customised
Shaft-to-shaft connection	Standard	Standard	Standard	Standard
Flange-to-shaft connection	CF, CFN	–	–	customised
Flange-to-flange connection » particularly short mounting lengths	DF, DNF	–	–	customised
Double-cardanic » compensating for big displacements, lower restoring forces	ZS-DKM-H, ZR, ZWN	–	–	–
Certifications/type examinations				
ATEX	●	●	●	●
UL-listed	●			
GOST R/ GOST TR	●	●	●	●
DNV/GL	●			●
ABS	●			○
Bureau Veritas	●			○
LR	○			○
RS CLASS	○			○
CCS	○			○
ClassNK	○			

● ≈ Standard
○ ≈ On request

Types of hubs

Since ROTEX® is used on many different applications and mounting conditions, this coupling system is available with various hub types. These types mainly differ in that they provide either positive or frictionally engaged (backlash-free) connections, but mounting situations like, for example, gear shafts with integrated transmission cams or similar applications are covered, too.

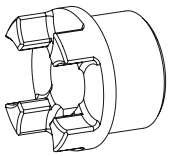

Type 1.0 hub
with feather keyway and setscrew

Positive-locking power transmission, permissible torque depending on the permissible surface pressure. Not suitable for backlash-free power transmission with heavily reversing operation.

Type 1.1 hub
without feather keyway, with setscrew

Non-positive torque transmission for crimping connections and adhesive bonds. (No ATEX approval)

Type 1.3 hub
with spline bore (see page 36)

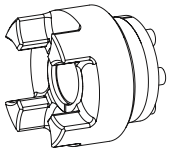

Type 4.2 hub
for CLAMPEX® clamping set KTR 250

Frictionally engaged, backlash-free shaft-hub-connection for transmitting average torques.

Type 4.1 for CLAMPEX® clamping set KTR 200
Type 4.3 for CLAMPEX® clamping set KTR 400

Frictionally engaged, backlash-free shaft-hub-connection for the transmission of high torques.

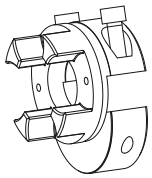

Type 7.5 clamping hub type DH
without feather keyway for double-cardanic connection

Frictionally engaged, backlash-free shaft-hub-connection for radial assembly of coupling. Transmittable torques depending on bore diameter. (For ATEX category 3 only)

Type 7.6 clamping hub type DH
with feather keyway for double-cardanic connection

Positive-locking power transmission with additional friction fit for radial assembly of coupling. The friction fit avoids or reduces reverse backlash. Surface pressure of the keyway connection is reduced.

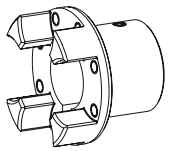

FNN hub

Coupling hub to be connected to an attachment such as brake drum, brake disk and fan.

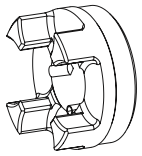

TB1 hub/TB2 hub

Coupling hub for taper clamping sleeves TB1 screwed on cam side. TB2 screwed externally.

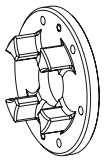

Driving flange type 3b

Driving flange to connect to customer's component. For dimensions see page 52

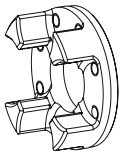

Driving flange type 3Na

Driving flange to connect to customer's component. For dimensions see page 52

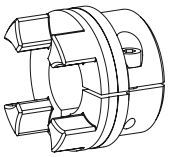

Type 2.0 clamping hub
single slot without feather keyway

Frictionally engaged, backlash-free shaft-hub-connection. Transmittable torques depending on bore diameter (see page 44). (For ATEX category 3 only)

Type 2.1 clamping hub
single slot with feather keyway

Positive-locking power transmission with additional friction fit. The friction fit avoids or reduces reverse backlash. Surface pressure of the keyway connection is reduced.

Type 2.3 clamping hub
with spline bore (see page 36)

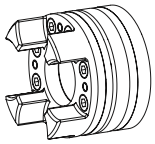

Type 6.0 clamping ring hub
(see ROTEX® GS series)

Integrated frictionally engaged shaft-hub-connection for the transmission of higher torques. Screwing on elastomer side. For details about torque and dimensions see page 43. Suitable for high speeds.

Type 6.5 clamping ring hub
(see ROTEX® GS series)

Design like 6.0, except for clamping screws externally. As an example for radial disassembly of intermediate pipe (special design).

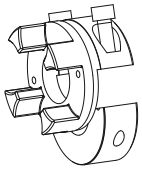

Type 7.8 clamping hub type H
without feather keyway

Frictionally engaged, backlash-free shaft-hub-connection for radial assembly of coupling. Transmittable torques depending on bore diameter. (For ATEX category 3 only)

Type 7.9 clamping hub type H
with feather keyway

Positive-locking power transmission with additional friction fit for radial assembly of coupling. The friction fit avoids or reduces reverse backlash. Surface pressure of the keyway connection is reduced.

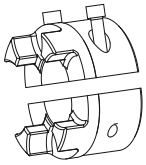

Type 7.1 SPLIT hub
with feather keyway

Split hub made of cast iron. Positive-locking power transmission with additional friction fit. The friction fit avoids or reduces reverse backlash. Surface pressure of the keyway connection is reduced.

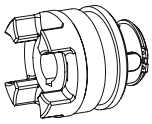

SD hub shifting hub

Coupling hub for separating or switching on the driving/driven machine with standstill of the machine. Can be combined with slip ring and shiftable linkage.

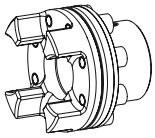

Type 3Na and 4N
Driving flange with flange type K

For type AFN and BFN.
With type AFN the spider can be replaced while being assembled without having to disassemble the driving and driven side.

Displacements

Axial displacement ΔK_a

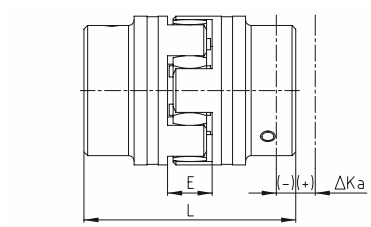

$L_{max.} = L + \Delta K_a$

Radial displacement ΔK_r

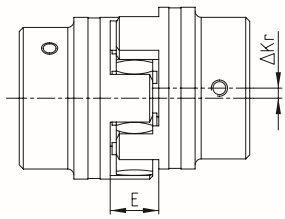

Angular displacement ΔK_w [degree]

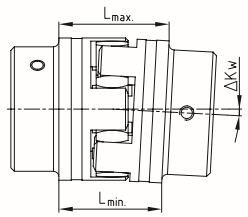

ΔK_w [mm] $= L_{max} - L_{min}$

Displacements for spider 92 and 98 Shore A																	
ROTEX® size	14	19	24	28	38	42	48	55	65	75	90	100	110	125	140	160	180
Max. axial displacement ΔK_a [mm]	-0.5 +1.0	-0.5 +1.2	-0.5 +1.4	-0.7 +1.5	-0.7 +1.8	-1.0 +2.0	-1.0 +2.1	-1.0 +2.2	-1.0 +2.6	-1.5 +3.0	-1.5 3.4	-1.5 +3.8	-2.0 +4.2	-2.0 +4.6	-2.0 +5.0	-2.5 +5.7	-3.0 +6.4
Max. radial displacement with n=1500 rpm ΔK_r [mm]	0.17	0.20	0.22	0.25	0.28	0.32	0.36	0.38	0.42	0.48	0.50	0.52	0.55	0.60	0.62	0.64	0.68
Max. angular displacement with n=1500 rpm ΔK_w [degree]	1.2	1.2	0.9	0.9	1.0	1.0	1.1	1.1	1.2	1.2	1.2	1.2	1.3	1.3	1.2	1.2	1.2
ΔK_w [mm]	0.67	0.82	0.85	1.05	1.35	1.70	2.00	2.30	2.70	3.30	4.30	4.80	5.60	6.50	6.60	7.60	9.00

Displacements for spider 64 Shore D																	
ROTEX® size	14	19	24	28	38	42	48	55	65	75	90	100	110	125	140	160	180
Max. axial displacement ΔK_a [mm]	-0.5 +1.0	-0.5 +1.2	-0.5 +1.4	-0.7 +1.5	-0.7 +1.8	-1.0 +2.0	-1.0 +2.1	-1.0 +2.2	-1.0 +2.6	-1.5 +3.0	-1.5 +3.4	-1.5 +3.8	-2.0 +4.2	-2.0 +4.6	-2.0 +5.0	-2.5 +5.7	-3.0 +6.4
Max. radial displacement with n=1500 rpm ΔK_r [mm]	0.11	0.13	0.15	0.18	0.21	0.23	0.25	0.27	0.30	0.34	0.36	0.37	0.40	0.43	0.45	0.46	0.49
Max. angular displacement with n=1500 rpm ΔK_w [degree]	1.1	1.1	0.8	0.8	0.9	0.9	1.0	1.0	1.1	1.1	1.1	1.1	1.2	1.2	1.1	1.1	1.1
ΔK_w [mm]	0.57	0.76	0.76	0.90	1.25	1.40	1.80	2.00	2.50	3.00	3.80	4.30	5.30	6.00	6.10	7.10	8.00

Displacements for spider PA, PEEK															
ROTEX® size	14	19	24	28	38	42	48	55	65	75	90	100	110	125	140
Max. axial displacement ΔK_a [mm]	-0.5 +1.0	-0.5 +1.2	-0.5 +1.4	-0.7 +1.5	-0.7 +1.8	-1.0 +2.0	-1.0 +2.1	-1.0 +2.2	-1.0 +2.6	-1.5 +3.0	-1.5 +3.4	-1.5 +3.8	-2.0 +4.2	-2.0 +4.6	-2.0 +5.0
Max. radial displacement with n=1500 rpm ΔK_r [mm]	0.08	0.10	0.11	0.12	0.14	0.16	0.18	0.19	0.21	0.24	0.25	0.26	0.27	0.30	0.31
Max. angular displacement with n=1500 rpm ΔK_w [degree]	0.60	0.45	0.45	0.50	0.50	0.55	0.55	0.55	0.60	0.60	0.60	0.60	0.65	0.65	0.60
ΔK_w [mm]	0.33	0.41	0.42	0.52	0.67	0.85	1.00	1.15	1.35	1.65	2.15	2.40	2.80	3.25	3.30

The above-mentioned displacement figures of the flexible ROTEX® couplings are standard values taking into account the load of the coupling up to the rated torque T_{KN} and an operating speed n = 1500 rpm along with an ambient temperature of +30 °C.
The displacement figures may only be used one by one, if they appear simultaneously, they must be limited in proportion. Care should be taken to maintain the distance dimension E accurately in order to allow for axial clearance of the coupling while in operation. Detailed mounting instructions are shown on our homepage www.ktr.com.

Properties of standard spiders

ROTEX® 14	ROTEX® 19	ROTEX® 24 - 65	ROTEX® 75 - 160	ROTEX® 180
	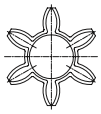	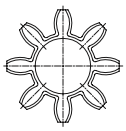	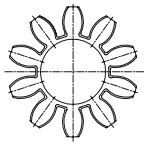	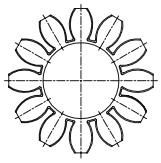

Degree of hardness

Spider type (Shore hardness)	92 Shore A (T-PUR®)	92 Shore A
	T-PUR®	
Size	14 to 180	14 to 90
Material	T-PUR®	Polyurethane (PUR)
Permissible temperature range Permanent temperature Short-term temperature	 -50 °C to +120 °C -50 °C to +150 °C	 -40 °C to +90 °C -50 °C to +120 °C
Features	– significantly higher service life expectancy – very good temperature resistance – improved damping of vibrations – good damping, average flexibility – suitable for all hub materials	– good damping, average flexibility – suitable for all hub materials

Spider type (Shore hardness)	98 Shore A (T-PUR®) [1]	98 Shore A [1]
	T-PUR®	
Size	14 to 180	14 to 90
Material	T-PUR®	Polyurethane (PUR)
Permissible temperature range Permanent temperature Short-term temperature	 -50 °C to +120 °C -50 °C to +150 °C	 -30 °C to +90 °C -40 °C to +120 °C
Features	– significantly higher service life expectancy – very good temperature resistance – improved damping of vibrations – transmission of high torques with average damping – recommended hub material: steel, GJL and GJS	– transmission of high torques with average damping – recommended hub material: steel, GJL and GJS

Spider type (Shore hardness)	64 Shore D (T-PUR®)
	T-PUR®
Size	14 to 180
Material	T-PUR®
Permissible temperature range Permanent temperature Short-term temperature	 -50 °C to +120 °C -50 °C to +150 °C
Features	– significantly higher service life expectancy – very good temperature resistance – improved damping of vibrations – transmission of very high torques with low damping – recommended hub material: steel and GJS

Technical data of standard spiders

92 Shore A spider made of T-PUR® and PUR

ROTEX® size	Max. speed v=35 m/s cast material	Max. speed v=40 m/s steel	Torsion angle ϕ with T_{KN}	Torsion angle ϕ with $T_{K\,max}$	Torque [Nm] DIN 740 [1] Rated T_{KN}	Torque [Nm] DIN 740 [1] Max. $T_{K\,max}$	Torque [Nm] DIN 740 [1] Vibratory T_{KW}	Torque [Nm] $T_{K\,max}$ [2]	Damping power P_{KW} [W] [3]	Relative damping ψ	Resonance factor V_R	Torsion spring stiffness C dyn. [Nm/rad] 1.0 T_{KN}	0.75 T_{KN}	0.5 T_{KN}	0.25 T_{KN}
14	22200	25400	6.4°	10°	7.5	15	2.0	22.5	–			$0.38x10^3$	$0.31x10^3$	$0.24x10^3$	$0.14x10^3$
19	16700	19000			10	20	2.6	30	4.8			$1.28x10^3$	$1.05x10^3$	$0.8x10^3$	$0.47x10^3$
24	12100	13800			35	70	9.1	105	6.6			$4.86x10^3$	$3.98x10^3$	$3.01x10^3$	$1.79x10^3$
28	10100	11500			95	190	25	285	8.4			$10.9x10^3$	$8.94x10^3$	$6.76x10^3$	$4.01x10^3$
38	8300	9500			190	380	49	570	10.2			$21.05x10^3$	$17.26x10^3$	$13.05x10^3$	$7.74x10^3$
42	7000	8000			265	530	69	795	12.0			$23.74x10^3$	$19.47x10^3$	$14.72x10^3$	$8.73x10^3$
48	6350	7250			310	620	81	930	13.8			$36.7x10^3$	$30.09x10^3$	$22.75x10^3$	$13.49x10^3$
55	5550	6350			410	820	107	1230	15.6			$50.7x10^3$	$41.59x10^3$	$31.45x10^3$	$18.64x10^3$
65	4950	5650	3.2°	5°	625	1250	163	1875	18.0	0.80	7.90	$97.1x10^3$	$79.65x10^3$	$60.2x10^3$	$35.7x10^3$
75	4150	4750			1280	2560	333	3840	21.6			$113.3x10^3$	$92.9x10^3$	$70.3x10^3$	$41.65x10^3$
90	3300	3800			2400	4800	624	7200	30.0			$190.1x10^3$	$155.9x10^3$	$117.9x10^3$	$69.9x10^3$
100	2950	3350			3300	6600	858	9900	36.0			$253.1x10^3$	$207.5x10^3$	$156.9x10^3$	$93x10^3$
110	2600	2950			4800	9600	1248	14400	42.0			$415.5x10^3$	$336.9x10^3$	$257.6x10^3$	$177.4x10^3$
125	2300	2600			6650	13300	1729	19950	48.0			$647.7x10^3$	$537.3x10^3$	$412.2x10^3$	$277.5x10^3$
140	2050	2350			8550	17100	2223	25650	54.6			$813.4x10^3$	$670.2x10^3$	$519.7x10^3$	$351.7x10^3$
160	1800	2050			12800	25600	3328	38400	75.0			$1298x10^3$	$1104x10^3$	$901.9x10^3$	$655.7x10^3$
180	1550	1800			18650	37300	4849	55950	78.0			$2327x10^3$	$1981x10^3$	$1618x10^3$	$1176x10^3$

98 Shore A spider made of T-PUR® and PUR

ROTEX® size	Max. speed v=35 m/s cast material	Max. speed v=40 m/s steel	Torsion angle ϕ with T_{KN}	Torsion angle ϕ with $T_{K\,max}$	Torque [Nm] DIN 740 [1] Rated T_{KN}	Torque [Nm] DIN 740 [1] Max. $T_{K\,max}$	Torque [Nm] DIN 740 [1] Vibratory T_{KW}	Torque [Nm] $T_{K\,max}$ [2]	Damping power P_{KW} [W] [3]	Relative damping ψ	Resonance factor V_R	Torsion spring stiffness C dyn. [Nm/rad] 1.0 T_{KN}	0.75 T_{KN}	0.5 T_{KN}	0.25 T_{KN}
14	22200	25400	6.4°	10°	12.5	25	3.3	37.5	–			$0.56x10^3$	$0.46x10^3$	$0.35x10^3$	$0.21x10^3$
19	16700	19000			17	34	4.4	51	4.8			$2.92x10^3$	$2.39x10^3$	$1.81x10^3$	$1.07x10^3$
24	12100	13800			60	120	16	180	6.6			$9.93x10^3$	$8.14x10^3$	$6.16x10^3$	$3.65x10^3$
28	10100	11500			160	320	42	480	8.4			$26.77x10^3$	$21.95x10^3$	$16.6x10^3$	$9.84x10^3$
38	8300	9500			325	650	85	975	10.2			$48.57x10^3$	$39.83x10^3$	$30.11x10^3$	$17.85x10^3$
42	7000	8000			450	900	117	1350	12.0			$54.5x10^3$	$44.69x10^3$	$33.79x10^3$	$20.03x10^3$
48	6350	7250			525	1050	137	1575	13.8			$65.3x10^3$	$53.54x10^3$	$40.48x10^3$	$24x10^3$
55	5550	6350			685	1370	178	2055	15.6			$95x10^3$	$77.9x10^3$	$58.88x10^3$	$34.9x10^3$
65	4950	5650	3.2°	5°	940	1880	244	2820	18.0	0.80	7.90	$129.5x10^3$	$106.2x10^3$	$80.3x10^3$	$47.6x10^3$
75	4150	4750			1920	3840	499	5760	21.6			$197.5x10^3$	$162x10^3$	$122.5x10^3$	$72.6x10^3$
90	3300	3800			3600	7200	936	10800	30.0			$312.2x10^3$	$256x10^3$	$193.6x10^3$	$114.7x10^3$
100	2950	3350			4950	9900	1287	14850	36.0			$383.3x10^3$	$314.3x10^3$	$237.6x10^3$	$140.9x10^3$
110	2600	2950			7200	14400	1872	21600	42.0			$805.9x10^3$	$663.1x10^3$	$515.3x10^3$	$360.5x10^3$
125	2300	2600			10000	20000	2600	30000	48.0			$1207x10^3$	$1003x10^3$	$787.6x10^3$	$552.5x10^3$
140	2050	2350			12800	25600	3328	38400	54.6			$1549x10^3$	$1283x10^3$	$979.8x10^3$	$674.1x10^3$
160	1800	2050			19200	38400	4992	57600	75.0			$2481x10^3$	$2137x10^3$	$1781x10^3$	$1275x10^3$
180	1550	1800			28000	56000	7280	84000	78.0			$4220x10^3$	$3635x10^3$	$3031x10^3$	$2170x10^3$

64 Shore D spider made of T-PUR® and PUR

ROTEX® size	Max. speed v=35 m/s cast material	Max. speed v=40 m/s steel	Torsion angle ϕ with T_{KN}	Torsion angle ϕ with $T_{K\,max}$	Torque [Nm] DIN 740 [1] Rated T_{KN}	Torque [Nm] DIN 740 [1] Max. $T_{K\,max}$	Torque [Nm] DIN 740 [1] Vibratory T_{KW}	Torque [Nm] $T_{K\,max}$ [2]	Damping power P_{KW} [W] [3]	Relative damping ψ	Resonance factor V_R	Torsion spring stiffness C dyn. [Nm/rad] 1.0 T_{KN}	0.75 T_{KN}	0.5 T_{KN}	0.25 T_{KN}
14	22200	25400	4.5°	7.0°	16	32	4.2	48	9.0			$0.76x10^3$	$0.62x10^3$	$0.47x10^3$	$0.28x10^3$
19	16700	19000			21	42	5.5	63	7.2			$5.35x10^3$	$4.39x10^3$	$3.32x10^3$	$1.97x10^3$
24	12100	13800			75	150	19.5	225	9.9			$15.11x10^3$	$12.39x10^3$	$9.37x10^3$	$5.55x10^3$
28	10100	11500			200	400	52	600	12.6			$27.52x10^3$	$22.57x10^3$	$17.06x10^3$	$10.12x10^3$
38	8300	9500			405	810	105	1215	15.3			$70.15x10^3$	$57.52x10^3$	$43.49x10^3$	$25.78x10^3$
42	7000	8000			560	1120	146	1680	18.0			$79.9x10^3$	$65.5x10^3$	$49.52x10^3$	$29.35x10^3$
48	6350	7250			655	1310	170	1965	20.7			$95.5x10^3$	$78.3x10^3$	$59.22x10^3$	$35.1x10^3$
55	5550	6350			825	1650	215	2475	23.4			$107.9x10^3$	$88.5x10^3$	$66.9x10^3$	$39.66x10^3$
65	4950	5650	2.5°	3.6°	1175	2350	306	3525	27.0	0.75	8.50	$151.1x10^3$	$123.9x10^3$	$93.7x10^3$	$55.53x10^3$
75	4150	4750			2400	4800	624	7200	32.4			$248.2x10^3$	$203.5x10^3$	$153.9x10^3$	$91.2x10^3$
90	3300	3800			4500	9000	1170	13500	45.0			$674.5x10^3$	$553.1x10^3$	$418.2x10^3$	$247.9x10^3$
100	2950	3350			6185	12370	1608	18555	54.0			$861.2x10^3$	$706.2x10^3$	$533.9x10^3$	$316.5x10^3$
110	2600	2950			9000	18000	2340	27000	63.0			$1230x10^3$	$1001x10^3$	$773.1x10^3$	$531.4x10^3$
125	2300	2600			12500	25000	3250	37500	72.0			$1749x10^3$	$1436x10^3$	$1149x10^3$	$832.1x10^3$
140	2050	2350			16000	32000	4160	48000	81.9			$2312x10^3$	$1929x10^3$	$1521x10^3$	$1082x10^3$
160	1800	2050			24000	48000	6240	72000	112.5			$3415x10^3$	$2961x10^3$	$2471x10^3$	$1830x10^3$
180	1550	1800			35000	70000	9100	105000	117.0			$5670x10^3$	$4917x10^3$	$4103x10^3$	$3038x10^3$

[1] see catalogue page 15
[2] ≤ 1000 load cycles
[3] with +30 °C

Temperature factor S_t

	-50 °C	-30 °C +30 °C	+40 °C	+50 °C	+60 °C	+70 °C	+80 °C	+90 °C	+100 °C	+110 °C	+120 °C
T-PUR®	1.0	1.0	1.1	1.2	1.3	1.45	1.6	1.8	2.1	2.5	3.0
PUR	–	1.0	1.2	1.3	1.4	1.55	1.8	2.2	–	–	–

Unless the Shore hardness of spider is not explicitly specified in your order, we will supply spiders with Shore hardness 92 Shore A T-PUR®.
For circumferential speeds exceeding v = 30 m/s dynamic balancing is required. For circumferential speeds exceeding v = 35 m/s only steel or nodular iron.

Technical data and properties of special spiders

Description	PA	PEEK
Material	Polyamide	Polyetheretherketone
Permissible temperature range Permanent temperature Short-term temperature	 -20 °C to +130 °C [1)] -30 °C to +150 °C [1)]	 up to +180 °C (ATEX up to +160 °C) up to +250 °C
Features	– small twisting angle and high torsion spring stiffness – transmission of very high torques with very low damping – good resistance to chemicals [1)] – recommended hub material: steel – high restoring forces with displacements	– small twisting angle and high torsion spring stiffness – transmission of very high torques with very low damping – highly temperature-resistant, resistant to hydrolysis – good resistance to chemicals – recommended hub material: steel – high restoring forces with displacements

[1)] different properties depending on compound

Torques			
ROTEX® size	PA, PEEK		
	T_{KN} [Nm]	$T_{K\,max}$ [Nm]	T_{KW} [Nm]
14	22	44	5.5
19	30	60	8.0
24	105	210	27.5
28	280	560	73
38	565	1130	147
42	785	1570	204
48	915	1830	238
55	1200	2400	312
65	1645	3290	427
75	2560	5130	667
90	6300	12600	1640
100	8650	17300	2250
110	10500	21000	2730
125	13000	26000	3380

Temperature factor S_t												
	-50 °C	-30 °C +30 °C	+40 °C	+50 °C	+60 °C	+70 °C	+80 °C	+90 °C	+100 °C	+110 °C	+120 °C	+180 °C
PA	–	1.0	1.15	1.25	1.4	1.6	1.9	2.3	3.0	–	–	–
PEEK	–	1.0	1.0	1.0	1.0	1.0	1.0	1.0	1.0	1.0	1.0	1.0

Installation of spider

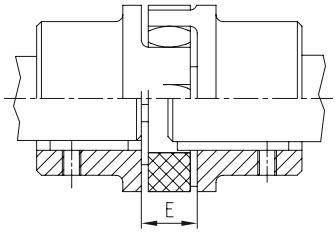

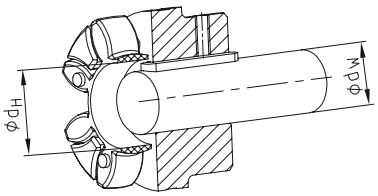

Shaft Ød$_W$ with feather key (acc. to DIN 6885 sheet 1) protruding into the spider Ød$_H$

Assembly dimensions																	
ROTEX® size	14	19	24	28	38	42	48	55	65	75	90	100	110	125	140	160	180
Distance dimension E	13	16	18	20	24	26	28	30	35	40	45	50	55	60	65	75	85
Dimension d_H	10	18	27	30	38	46	51	60	68	80	100	113	127	147	165	190	220
Dimension d_W [2)]	7	12	20	22	28	36	40	48	55	65	80	95	100	120	135	160	185

[2)] If the shaft diameter is smaller than or equal to dimension d_H, one shaft end or both shaft ends may protrude with the feather keyway into the spider.

Selection of standard IEC motors

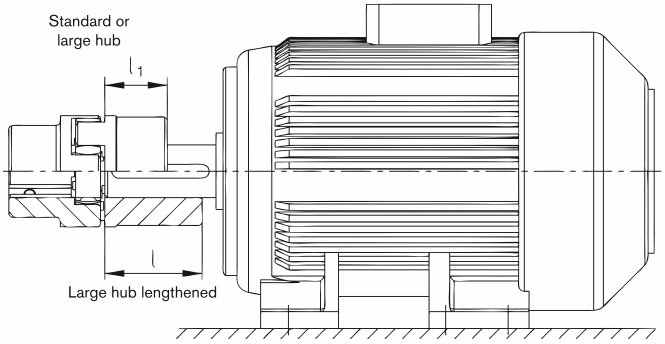

ROTEX® couplings for standard IEC motors, protection class IP 54/IP 55 (spider 92 Shore A)

A. C. motor 50 Hz			Motor power n= 3000 rpm 2 poles		ROTEX® coupling size	Motor power n= 1500 rpm 4 poles		ROTEX® coupling size	Motor power n= 1000 rpm 6 poles		ROTEX® coupling size	Motor power n= 750 rpm 8 poles		ROTEX® coupling size
Size	Shaft end dxl [mm] 2 poles	4, 6, 8 poles	Power P [kW]	Torque T [Nm]		Power P [kW]	Torque T [Nm]		Power P [kW]	Torque T [Nm]		Power P [kW]	Torque T [Nm]	
56	9 x 20		0.09	0.32	9 [1]	0.06	0.43	9 [1]	0.037	0.43	9 [1]			
			0.12	0.41		0.09	0.64		0.045	0.52				
63	11 x 23		0.18	0.62		0.12	0.88		0.06	0.7				
			0.25	0.86	14	0.18	1.3	14	0.09	1.1	14			
71	14 x 30		0.37	1.3		0.25	1.8		0.18	2		0.09	1.4	14
			0.55	1.9		0.37	2.5		0.25	2.8		0.12	1.8	
80	19 x 40		0.75	2.5		0.55	3.7		0.37	3.9		0.18	2.5	
			1.1	3.7	19	0.75	5.1	19	0.55	5.8	19	0.25	3.5	19
90S	24 x 50		1.5	5		1.1	7.5		0.75	8		0.37	5.3	
90L			2.2	7.4		1.5	10		1.1	12		0.55	7.9	
100L	28 x 60		3	9.8		2.2	15	24	1.5	15	24	0.75	11	24
					24	3	20					1.1	16	
112M			4	13		4	27		2.2	22		1.5	21	
132S	38 x 80		5.5	18		5.5	36		3	30		2.2	30	
			7.5	25	28			28			28			28
132M						7.5	49		4	40		3	40	
									5.5	55				
160M	42 x 110		11	36		11	72		7.5	75		4	54	
			15	49	38			38			38	5.5	74	38
160L			18.5	60		15	98		11	109		7.5	100	
180M	48 x 110		22	71		18.5	121							
180L						22	144	42	15	148	42	11	145	42
200L	55 x 110		30	97	42	30	196		18.5	181		15	198	
			37	120					22	215				
225S	55 x 110	60 x 140				37	240	48				18.5	244	48
225M			45	145		45	292	55	30	293	55	22	290	55
250M	60 x 140	65 x 140	55	177	48	55	356		37	361	65 [2]	30	392	65
280S		75 x 140	75	241	55	75	484	65 [2]	45	438		37	483	65 [2]
280M			90	289		90	581		55	535		45	587	75
315S		80 x 170	110	353		110	707	75	75	727	75	55	712	
315M	65 x 140		132	423	65	132	849		90	873		75	971	
			160	513		160	1030		110	1070		90	1170	90
315L			200	641		200	1290	90	132	1280	90	110	1420	
		85 x 170			75				160	1550		132	1710	
315			250	802		250	1600		200	1930		160	2070	
			315	1010		315	2020		250	2410	100	200	2580	100
			355	1140		355	2280	100						
355	75 x 140	95 x 170	400	1280	90	400	2570		315	3040	110	250	3220	110
			500	1600		500	3210	110	400	3850	125	315	4060	125
			560	1790		560	3580	125	450	4330		355	4570	
400	80 x 170	110 x 210	630	2020		630	4030		500	4810		400	5150	140
			710	2270	100	710	4540		560	5390	140	450	5790	
			800	2560		800	5120	140	630	6060		500	6420	
450	90 x 170	120 x 210	900	2880	110	900	5760		710	6830	160	560	7190	160
			1000	3200		1000	6400	160	800	7690		630	8090	

The coupling selection is based on an ambient temperature up to +30 °C. The selection is based on a minimum safety factor of 2 versus the max. coupling torque ($T_{K\ max}$). A detailed selection is possible according to catalogue page 14 et seqq. Drives with periodical torque curves must be selected according to DIN 740 part 2. If requested, KTR will perform the selection. Torque T = rated torque according to Siemens catalogue M 11 · 1994/95.

[1] For dimensions see ROTEX® GS series

[2] For motor hub made of steel see page 40

Cylindrical bores and spline bores

Stock programme of cylindrical finish bores [mm] H7 feather keyway acc. to DIN 6885 sheet 1 [JS9] and setscrew

ROTEX® size	Material	Unbored	Ø6	Ø8	Ø9	Ø10	Ø11	Ø12	Ø14	Ø15	Ø16	Ø17	Ø18	Ø19	Ø20	Ø22	Ø24	Ø25	Ø28	Ø30	Ø32	Ø35	Ø38	Ø40	Ø42	Ø45	Ø48	Ø50	Ø55	Ø60	Ø65	Ø70	Ø75	Ø80	Ø85	Ø90	Ø100
14	Sint	●		●		●	●	●	●	●	●																										
	Al-H	●	●	●	●	●	●	●	●	●	●																										
19	Sint	●							●		●			●	●	●	●																				
	Al-D	●		●		●	●	●	●	●	●	●	●	●	●		●																				
	St	●		●	●	●	●	●	●	●	●	●	●	●	●	●	●	●																			
24	Sint	●											●		●		●	●	●																		
	Al-D	●				●		●	●	●	●	●	●	●	●	●	●	●	●		●																
	St	●				●	●	●	●	●	●	●	●	●	●	●	●	●	●	●	●																
28	Al-D	●							●		●		●	●	●	●	●	●	●	●	●	●	●														
	St	●							●	●	●	●	●	●	●	●	●	●	●	●	●	●	●	●													
38	GJL	●											●	●	●	●	●	●	●	●	●	●	●	●	●	●	●										
	St	●													●		●	●	●	●	●	●	●	●	●	●	●										
42	GJL	●													●	●	●	●	●	●	●	●	●	●	●	●	●	●	●								
	St	●																●	●	●	●	●	●	●	●	●	●	●	●								
48	GJL	●																●	●	●	●	●	●	●	●	●	●	●	●	●							
	St	●																		●	●	●	●	●	●	●	●	●	●	●							
55	GJL	●																●		●	●	●	●	●	●	●	●	●	●	●	●	●					
	St	●																			●	●	●	●		●	●	●	●	●	●		●				
65	GJL	●																			●	●	●	●	●	●	●	●	●	●	●	●					
	St	●																						●	●	●	●	●	●	●	●	●	●	●			
75	GJL	●																					●	●	●	●	●	●	●	●	●	●	●	●			
	St	●																						●		●	●	●	●	●	●	●	●	●	●	●	
90	GJL	●																										●	●	●	●	●	●	●	●	●	
	St	●																												●		●	●	●		●	●

Basic programme of SAE involute splines

Spline code	Size	Pitch circle	Pitch	No. of teeth	Angle	Spline code	Size	Pitch circle	Pitch	No. of teeth	Angle
PH-S	5/8"	14.28	16/32	9	30°	**PS-S**	1 1/2"	35.98	12/24	17	30°
PI-S	3/4"	17.46	16/32	11	30°	**PD-S**	1 1/2"	36.51	16/32	23	30°
PB-S	7/8"	20.63	16/32	13	30°	**PE-S**	1 3/4"	42.86	16/32	27	30°
PB-BS	1"	23.81	16/32	15	30°	**PK-S**	1 3/4"	41.275	8/16	13	30°
PJ	1 1/8"	26.98	16/32	17	30°	**PT-C** [1]	2"	47.625	8/16	15	30°
PC-S	1 1/4"	29.63	12/24	14	30°	**PQ-C** [1]	2 1/4"	53.975	8/16	17	30°
PA-S	1 3/8"	33.33	16/32	21	30°						

Basic programme of spline bores acc. to DIN 5482

Size	Pitch circle	Module	No. of teeth	Profile correction	Size	Pitch circle	Module	No. of teeth	Profile correction
A 17 x 14	14.40	1.6	9	+0.600 [2]	**A 35 x 31**	31.50	1.75	18	+0.676
A 20 x 17	19.20	1.6	12	-0.2	**A 40 x 36**	38.00	1.9	20	+0.049
A 25 x 22	22.40	1.6	14	+0.550	**A 45 x 41**	44.00	2	22	+0.181
A 28 x 25	26.25	1.75	15	+0.302	**A 50 x 45**	48.00	2	24	+0.181
A 30 x 27	28.00	1.75	16	+0.327					

Basic programme of spline bores acc. to DIN 5480

Spline code	Pitch circle	Module	No. of teeth	Spline code	Pitch circle	Module	No. of teeth
20 x 1 x 18 x 7H	18.0	1	18	**40 x 2 x 18 x 8H**	36.0	2	18
20 x 1.25 x 14 x 7H	17.5	1.25	14	**45 x 2 x 21 x 7H**	41.0	2	21
25 x 1.25 x 18 x 7H	22.5	1.25	18	**48 x 2 x 22 x 9H**	44.0	2	22
28 x 1.25 x 21 x 7H	26.25	1.25	21	**50 x 2 x 24 x 8H**	48.0	2	24
30 x 2 x 14 x 7H	26.0	2	14	**60 x 2 x 28 x 8H**	56.0	2	28
32 x 2 x 14 x 8H	28.0	2	14	**75 x 3 x 24 x 7H**	72.0	3	24
35 x 2 x 16 x 8H	32.0	2	16	**80 x 3 x 25 x 8H**	75.0	3	25

Basic programme of spline bores acc. to DIN 9611 - ISO 500 (p.t.o. shaft connection)

Size	Width of keyway	No. of teeth	Tip circle	Root circle
1 3/8"	8.69	6	34.93	29.65
1 3/8"	–	21	34.95	34.80 [3]
1 3/4"	11.07	6	44.45	37.74
1 3/4"	–	20	45.20	40.20

1 3/8", 6 teeth

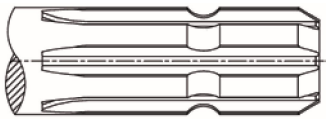

1 3/4", 6 teeth

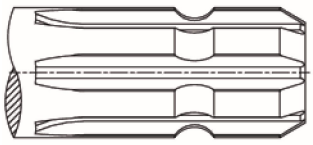

1 3/4 ", 20 teeth

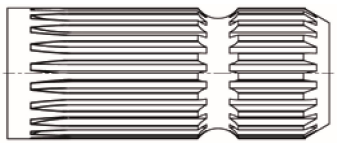

Spline clamping hubs are often adapted to the shafts of hydraulic pumps/hydraulic motor shafts. Please contact us for the respective hub length of the spline code!
[1] For clamping hubs only, with plug-in hubs use code PT or PQ.
[2] Profile correction different from DIN
[3] Similar to code PA-S

Inch bores and taper bores

Stock programme of inch bores

Bore and keyway acc. to ANSI/AGMA 9002-C14
Bore (clearance fit) Keyway (commercial class fit)

KTR code	Ø bore ["]	Width of keyway ["]	Ø bore [mm]	Width of keyway [mm]	Keyway depth/ Tolerance +0.381 [mm]	Size 19	24	28	38	42	48	55	65	75	90
						Steel			Cast iron (GJL)						
Tb	3/8	1/8	9.525 $^{+0.0254}$	3.175 $^{+0.051}$	10.972										
DNB	7/16	3/32	11.112 $^{+0.0254}$	2.382 $^{+0.051}$	12.293										
T	1/2	3/16	12.7 $^{+0.0254}$	4.762 $^{+0.051}$	14.757										
Ta	1/2	1/8	12.7 $^{+0.0254}$	3.175 $^{+0.051}$	14.224	●	●								
DNC	17/32	1/8	13.495 $^{+0.0254}$	3.175 $^{+0.051}$	15.011										
Do	9/16	1/8	14.287 $^{+0.0254}$	3.175 $^{+0.051}$	15.824										
E	5/8	1/8	15.875 $^{+0.0254}$	3.175 $^{+0.051}$	17.424										
Es	5/8	5/32	15.875 $^{+0.0254}$	3.968 $^{+0.051}$	17.729	●	●	●							
Ed	5/8	3/16	15.875 $^{+0.0254}$	4.762 $^{+0.051}$	18.008	●	●								
DNH	11/16	3/16	17.462 $^{+0.0254}$	4.762 $^{+0.051}$	19.634										
Ad	3/4	1/8	19.05 $^{+0.0254}$	3.175 $^{+0.051}$	20.624										
A	3/4	3/16	19.05 $^{+0.0254}$	4.762 $^{+0.051}$	21.259	●	●	●	●						
G	7/8	3/16	22.225 $^{+0.0254}$	4.762 $^{+0.051}$	24.485	●	●	●	●	●					
F	7/8	1/4	22.225 $^{+0.0254}$	6.35 $^{+0.051}$	25.069		●	●	●	●					
Gf	15/16	1/4	23.812 $^{+0.0254}$	6.35 $^{+0.051}$	26.695										
H	1	3/16	25.4 $^{+0.0254}$	4.762 $^{+0.051}$	27.686										
Hs	1	1/4	25.4 $^{+0.0254}$	6.35 $^{+0.051}$	28.295		●	●	●	●					
R	1 1/16	3/16	26.987 $^{+0.0254}$	4.762 $^{+0.051}$	29.286										
Sb	1 1/8	1/4	28.575 $^{+0.0254}$	6.35 $^{+0.051}$	31.521		●	●	●	●					
Sd	1 1/8	5/16	28.575 $^{+0.0254}$	7.937 $^{+0.051}$	32.105										
Js	1 1/4	1/4	31.75 $^{+0.0254}$	6.35 $^{+0.051}$	34.721				●						
K	1 1/4	5/16	31.75 $^{+0.0254}$	7.937 $^{+0.051}$	35.331			●	●	●	●	●	●		
Ma	1 3/8	5/16	34.925 $^{+0.0254}$	7.937 $^{+0.051}$	38.557			●	●						
RH1	1 3/8	3/8	34.925 $^{+0.0254}$	9.525 $^{+0.063}$	39.141										
Cb	1 7/16	3/8	36.512 $^{+0.0254}$	9.525 $^{+0.063}$	40.767										
Ca	1 1/2	5/16	38.1 $^{+0.0254}$	7.937 $^{+0.051}$	41.783										
C	1 1/2	3/8	38.1 $^{+0.0254}$	9.525 $^{+0.0635}$	42.392				●	●	●	●	●	●	
Nb	1 5/8	3/8	41.275 $^{+0.0254}$	9.525 $^{+0.0635}$	45.618				●	●					
Ls	1 3/4	3/8	44.45 $^{+0.0254}$	9.525 $^{+0.0635}$	48.818										
L	1 3/4	7/16	44.45 $^{+0.0254}$	11.112 $^{+0.0635}$	49.428										
Lu	1 7/8	1/2	47.625 $^{+0.0254}$	12.7 $^{+0.0635}$	53.238					●					
Da	1 15/16	1/2	49.212 $^{+0.0254}$	12.7 $^{+0.0635}$	54.864										
Ds	2	1/2	50.8 $^{+0.0254}$	12.7 $^{+0.0635}$	56.464										
Pa	2 1/8	1/2	53.975 $^{+0.0381}$	12.7 $^{+0.063}$	59.69					●					
U	2 1/4	1/2	57.15 $^{+0.0381}$	12.7 $^{+0.063}$	62.915										
Ub	2 3/8	5/8	60.325 $^{+0.0381}$	15.875 $^{+0.076}$	67.335										
Wd	3 3/8	7/8	85.725 $^{+0.0381}$	22.225 $^{+0.076}$	95.504										
Wf	3 5/8	7/8	92.075 $^{+0.0381}$	22.225 $^{+0.076}$	101.955										

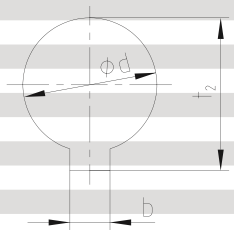

Basic programme taper 1:8

Code	$d^{+0.05}$	(d_2)	b^{JS9}	$t_2^{+0.1}$	l_K
N/1	9.7	7.575	$2.4^{+0.05}$	10.85	17.0
N/1c	11.6	9.5375	3^{JS9}	12.90	16.5
N/1e	13.0	10.375	$2.4^{+0.05}$	13.80	21.0
N/1d	14.0	11.813	3^{JS9}	15.50	17.5
N/1b	14.3	11.8625	$3.2^{+0.05}$	15.65	19.5
N/2	17.287	14.287	$3.2^{+0.05}$	18.24	24.0
N/2a	17.287	14.287	4^{JS9}	18.94	24.0
N/2b	17.287	14.287	3^{JS9}	18.34	24.0
N/3	22.002	18.502	4^{JS9}	23.40	28.0
N/4	25.463	20.963	$4.78^{+0.05}$	27.83	36.0
N/4b	25.463	20.963	5^{JS9}	28.23	36.0
N/4a	27.0	22.9375	$4.78^{+0.05}$	28.80	32.5
N/4g	28.45	23.6375	6^{JS9}	29.32	38.5
N/5	33.176	27.676	$6.38^{+0.05}$	35.39	44.0
N/5a	33.176	27.676	7^{JS9}	35.39	44.0

With code N/6 and N/6a keyway in parallel with taper.

Basic programme of taper 1:10

Code	$d^{+0.05}$	(d_2)	b^{JS9}	$t_2^{+0.1}$	l_K
CX	19.95	16.75	5^{JS9}	22.08	32
DX	24.95	20.45	6^{JS9}	26.68	45
EX	29.75	24.75	8^{JS9}	31.88	50

Basic programme taper 1:5

Code	$d^{+0.05}$	(d_2)	b_{JS9}	$t_2^{+0.1}$	l_K
A-10	9.85	7.55	2^{JS9}	1.0	11.5
B-17	16.85	13.15	3^{JS9}	1.8	18.5
C-20	19.85	15.55	4^{JS9}	2.2	21.5
Cs-22	21.95	17.65	3^{JS9}	1.8	21.5
D-25	24.85	19.55	5^{JS9}	2.9	26.5
E-30	29.85	23.55	6^{JS9}	2.6	31.5
F-35	34.85	27.55	6^{JS9}	2.6	36.5
G-40	39.85	32.85	6^{JS9}	2.6	35.0

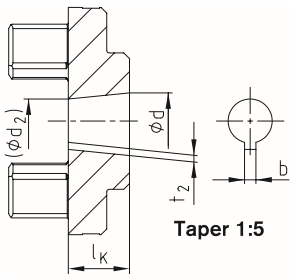

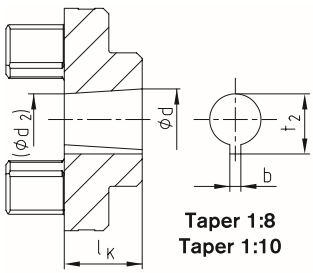

ROTEX® Standard
Flexible jaw couplings

Material aluminium + cast + powder metal

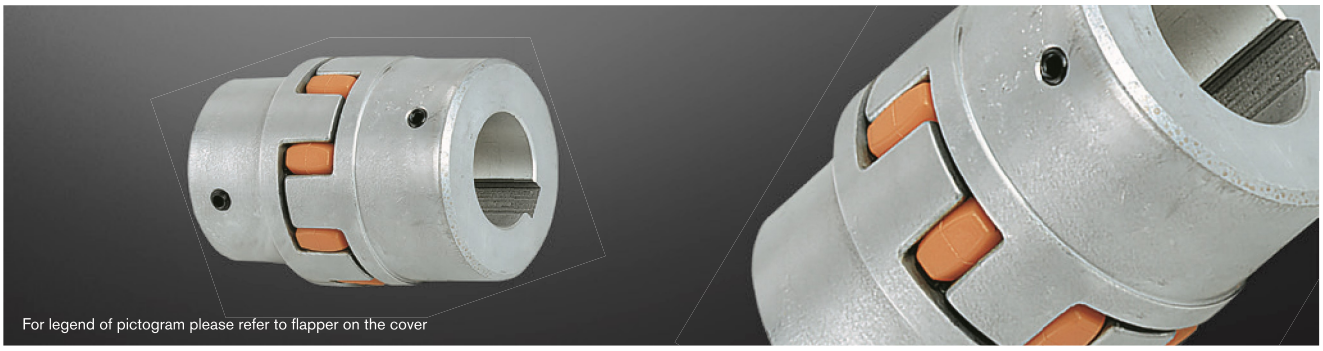

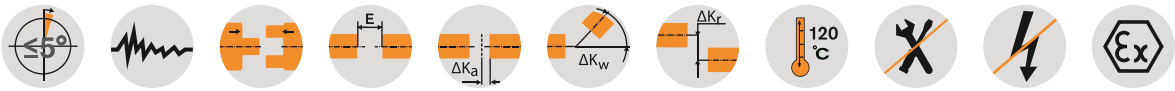

ROTEX® Powder metal steel (Sint)																		
Size	Compo-nent	Spider [1] (component 2) Rated torque [Nm]			Dimensions [mm]													
					Finish bore d	General										Setscrew		
		92 ShA	98 ShA	64 ShD		L	l_1, l_2	E	b	s	D_H	d_H	D	N		G	t	T_A [Nm]
14	1a	7.5	12.5	–	0-16	35	11	13	10	1.5	30	10	30	–		M4	5	1.5
19	1a	10	17	–	0-24	66	25	16	12	2.0	40	18	40	–		M5	10	2
24	1a	35	60	–	0-28	78	30	18	14	2.0	56	27	56	–		M5	10	2
ROTEX® Aluminium diecast (Al-D)																		
19	1	10	17	–	6-19	66	25	16	12	2	41	18	32	20		M5	10	2
	1a				19-24								41					
24	1	35	60	–	9-24	78	30	18	14	2	56	27	40	24		M5	10	2
	1a				22-28								56					
28	1	95	160	–	10-28	90	35	20	15	2.5	66	30	48	28		M8	15	10
	1a				28-38								66					
ROTEX® Aluminium (Al-H)																		
5	1a	0.5	0.9	-	0-6	15	5	5	4	0.5	10	-	-	-		M2	2.5	-
7	1a	1.2	2.0	2.4	0-7	22	7	8	6	1.0	14	-	-	-		M3	3.5	-
9	1a	3.0	5.0	6.0	0-11	30	10	10	8	1.0	20	7.2	-	-		M4	5	1.5
12	1a	5.0	9.0	12	0-12	34	11	12	10	1.0	25	8.5	-	-		M4	5	1.5
14	1a	7.5	12.5	16	0-16	35	11	13	10	1.5	30	10.5	-	-		M4	5	1.5
19	1a	10	17	26	0-24	66	25	16	12	2.0	40	18	-	-		M5	10	2
24	1a	35	60	75	0-28	78	30	18	14	2.0	55	27	-	-		M5	10	2
28	1a	95	160	200	0-38	90	35	20	15	2.5	65	30	-	-		M8	15	10
38	1a	190	325	405	0-45	114	45	24	18	3.0	80	38	-	-		M8	15	10
42	1a	265	450	560	0-55	126	50	26	20	3.0	95	46	-	-		M8	20	10
48	1a	310	525	655	0-62	140	56	28	21	3.0	105	51	-	-		M8	20	10

The coupling is provided with a ROTEX® GS spider as a standard (ROTEX® standard spider available, if requested).

ROTEX® Cast iron (GJL)																		
38	1	190	325	405	12-40	114	45	24	18	3	80	38	66	37		M8	15	10
	1a				38-48								78					
	1b				12-48	164	70							62				
42	1	265	450	560	14-45	126	50	26	20	3	95	46	75	40		M8	20	10
	1a				42-55								94					
	1b				14-55	176	75							65				
48	1	310	525	655	15-52	140	56	28	21	3.5	105	51	85	45		M8	20	10
	1a				48-62								104					
	1b				15-62	188	80							69				
55	1	410	685	825	20-60	160	65	30	22	4	120	60	98	52		M10	20	17
	1a				55-74								118					
65	1	625	940	1175	22-70	185	75	35	26	4.5	135	68	115	61		M10	20	17
75	1	1280	1920	2400	30-80	210	85	40	30	5	160	80	135	69		M10	25	17
90	1	2400	3600	4500	40-100	245	100	45	34	5.5	200	100	160	81		M12	30	40
ROTEX® Nodular iron (GJS)																		
100	1	3300	4950	6185	50-115	270	110	50	38	6	225	113	180	89		M12	30	40
110	1	4800	7200	9000	60-125	295	120	55	42	6.5	255	127	200	96		M16	35	80
125	1	6650	10000	12500	60-145	340	140	60	46	7	290	147	230	112		M16	40	80
140	1	8550	12800	16000	60-160	375	155	65	50	7.5	320	165	255	124		M20	45	140
160	1	12800	19200	24000	80-185	425	175	75	57	9	370	190	290	140		M20	50	140
180	1	18650	28000	35000	85-200	475	195	85	64	10.5	420	220	325	156		M20	50	140

■ =Unless any material is specified in the order, it is defined with the calculation/order.

[1] Maximum torque of the coupling $T_{K\ max}$ = rated torque of the coupling $T_{K\ rated}$ x 2. For selection see page 14 et seqq.

Ordering example:	ROTEX® 38	GJL	92 ShA	1a	Ø 45	1	Ø 25
	Coupling size	Material	Spider hardness	Component	Finish bore	Component	Finish bore

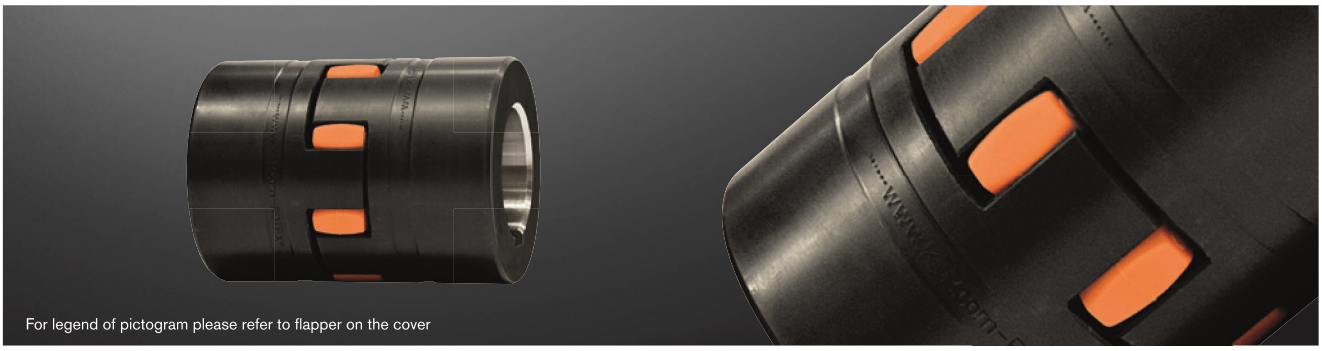

ROTEX® with CDP coating [1)]

Size	Compo-nent	Spider (component 2) Rated torque [Nm]			Dimensions [mm]												
					Finish bore	General									Setscrew		
		92 ShA	98 ShA	64 ShD	d (min. - max.)	L	l_1, l_2	E	b	s	D_H	d_H	D	N	G	t	T_A [Nm]
19	1a	10	17	21	0-25	66	25	16	12	2	40	18	40	–	M5	10	2
24	1a	35	60	75	0-35	78	30	18	14	2	55	27	55	–	M5	10	2
28	1a	95	160	200	0-40	90	35	20	15	2.5	65	30	65	–	M8	15	10
38	1	190	325	405	0-48	114	45	24	18	3	80	38	70	27	M8	15	10
42	1	265	450	560	0-55	126	50	26	20	3	95	46	85	28	M8	20	10
48	1	310	525	655	0-62	140	56	28	21	3.5	105	51	95	32	M8	20	10
55	1	410	685	825	0-74	160	65	30	22	4	120	60	110	37	M10	20	17
65	1	625	940	1175	0-80	185	75	35	26	4.5	135	68	115	47	M10	20	17
75	1	1280	1920	2400	0-95	210	85	40	30	5	160	80	135	53	M10	25	17
90	1	2400	3600	4500	0-110	245	100	45	34	5.5	200	100	160	62	M12	25	40
100	1	3300	4950	6185	0-115	270	110	50	38	6	225	113	180	89	M12	30	40
110	1	4800	7200	9000	0-125	295	120	55	42	6.5	255	127	200	96	M16	35	80
125	1	6650	10000	12500	60-145	340	140	60	46	7	290	147	230	112	M16	40	80

[1)] Corrosion protection class acc. to DIN EN ISO 12944: Min. C4, heavy-long

Components

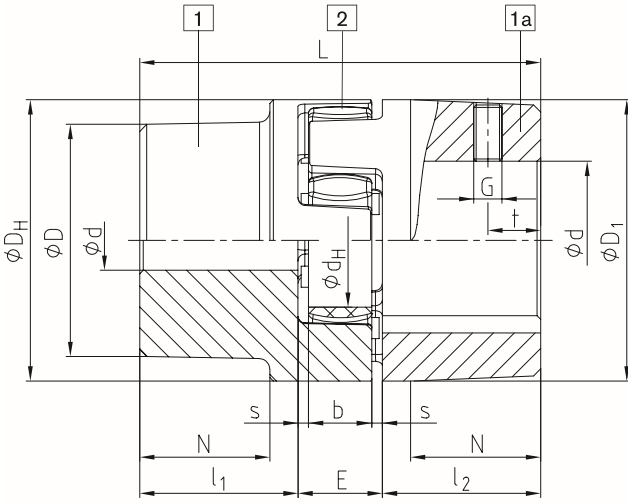

AI-D (thread opposite the keyway)

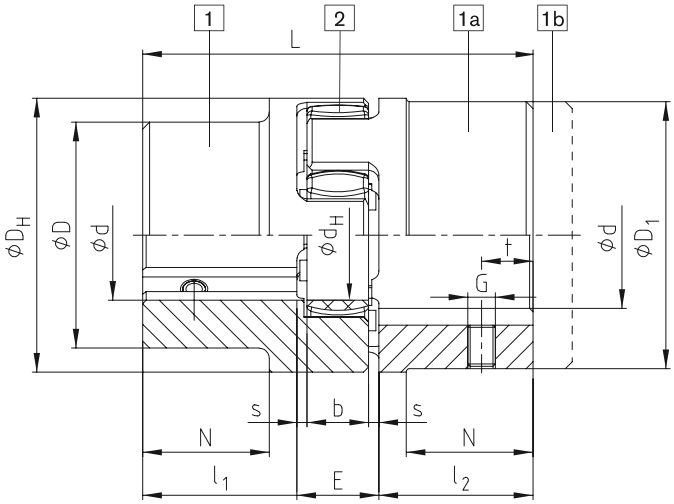

GJL / GJS (thread on the keyway)

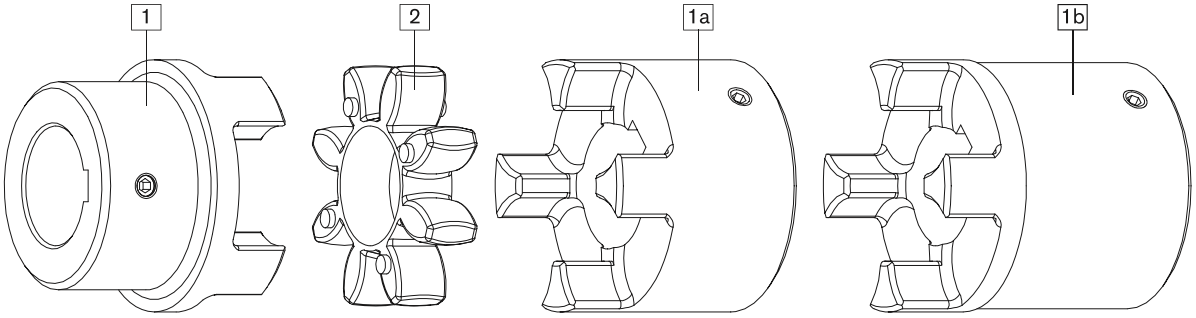

Standard hub | Spider | Large hub | Large hub lengthened

Material steel/stainless steel

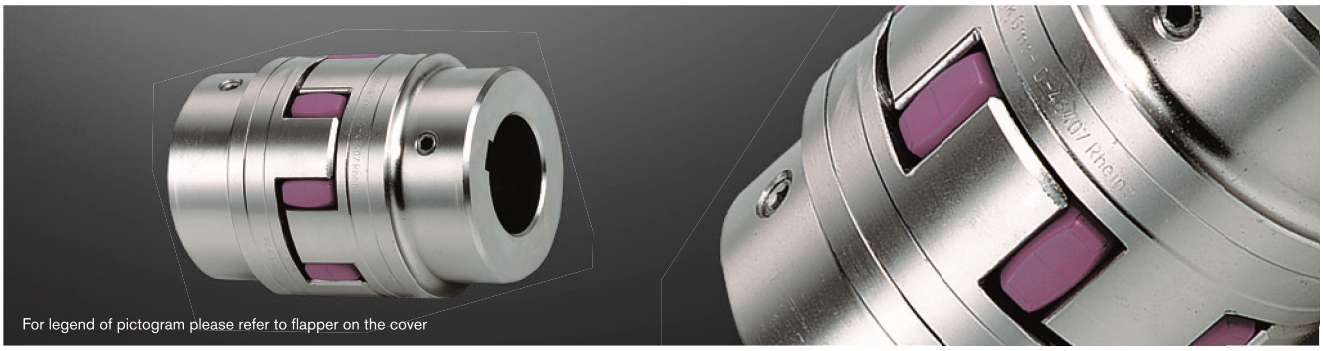

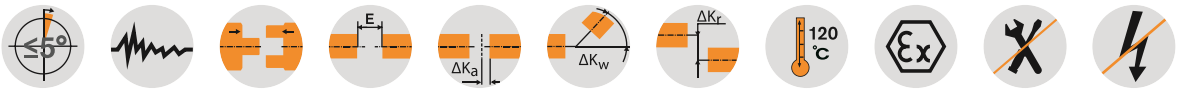

ROTEX® Steel (St)

Size	Component	Spider [1] (component 2) Rated torque [Nm]			Dimensions [mm]												
					Finish bore	General									Setscrew		
		92 ShA	98 ShA	64 ShD	d (min. - max.)	L	l_1, l_2	E	b	s	D_H	d_H	D	N	G	t	T_A [Nm]
14	1a	7.5	12.5	16	0-16	35	11	13	10	1.5	30	10	30	—	M4	5	1.5
	1b					50	18.5										
19	1a	10	17	21	0-25	66	25	16	12	2	40	18	40	—	M5	10	2
	1b					90	37										
24	1a	35	60	75	0-35	78	30	18	14	2	55	27	55	—	M5	10	2
	1b					118	50										
28	1a	95	160	200	0-40	90	35	20	15	2.5	65	30	65	—	M8	15	10
	1b					140	60										
38	1	190	325	405	0-48	114	45	24	18	3	80	38	70	27	M8	15	10
	1b					164	70						80	—			
42	1	265	450	560	0-55	126	50	26	20	3	95	46	85	28	M8	20	10
	1b					176	75						95	—			
48	1	310	525	655	0-62	140	56	28	21	3.5	105	51	95	32	M8	20	10
	1b					188	80						105	—			
55	1	410	685	825	0-75	160	65	30	22	4	120	60	110	37	M10	20	17
	1b					210	90						120	—			
65	1	625	940	1175	0-80	185	75	35	26	4.5	135	68	115	47	M10	20	17
	1b					235	100						135	—			
75	1	1280	1920	2400	0-95	210	85	40	30	5	160	80	135	53	M10	25	17
	1b					260	110						160	—			
90	1	2400	3600	4500	0-110	245	100	45	34	5.5	200	100	160	62	M12	30	40
	1b					295	125						200	—			
100	1	3300	4950	6185	0-115	270	110	50	38	6	225	113	180	89	M12	30	40
110	1	4800	7200	9000	0-125	295	120	55	42	6.5	255	127	200	96	M16	35	80
125	1	6650	10000	12500	60-145	340	140	60	46	7	290	147	230	112	M16	40	80
140	1	8550	12800	16000	60-160	375	155	65	50	7.5	320	165	255	124	M20	45	140
160	1	12800	19200	24000	80-185	425	175	75	57	9	370	190	290	140	M20	50	140
180	1	18650	28000	35000	85-200	475	195	85	64	10.5	420	220	325	156	M20	50	140

■ =Unless any material is specified in the order, it is defined with the calculation/order.
[1] Maximum torque of the coupling $T_{K\ max}$ = rated torque of the coupling $T_{K\ rated}$ x 2. For selection see page 14 et seqq.

ROTEX® Stainless steel

Size	Material	Spider (component 2) Rated torque [Nm]			Dimensions [mm]												
					Finish bore d	General									Setscrew		
		92 ShA	98 ShA	64 ShD	(min. - max.)	L	l_1, l_2	E	b	s	D_H	d_H	D	N	G	t	T_A [Nm]
19	1.4305	10	17	21	0-25	66	25	16	12	2	40	18	40	-	M5	10	2
24	1.4571	35	60	75	0-35	78	30	18	14	2	55	27	55	-	M5	10	2
28	1.4305	95	160	200	0-40	90	35	20	15	2.5	65	30	65	-	M8	15	10
38	1.4571	190	325	405	0-48	114	45	24	18	3	80	38	80	27	M8	15	10
42	1.4305	265	450	560	0-55	126	50	26	20	3	95	46	95	28	M8	20	10
48	1.4571	310	525	655	0-62	140	56	28	21	3.5	105	51	105	32	M8	20	10

Ordering example:

ROTEX® 38	St	92 ShA	1 - Ø45		1 - Ø25	
Coupling size	Material	Spider hardness	Component	Finish bore	Component	Finish bore

DIN EN 10204 - 3.1 and 3.2 material test certificate

Components

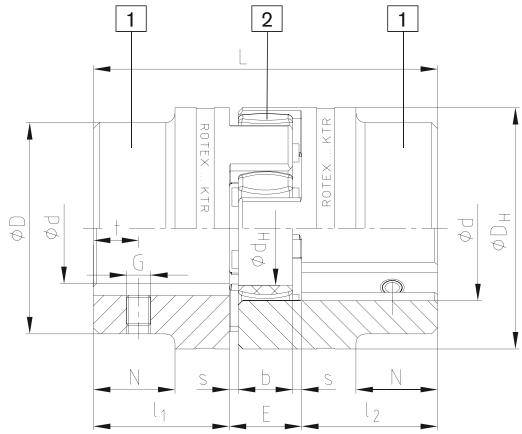

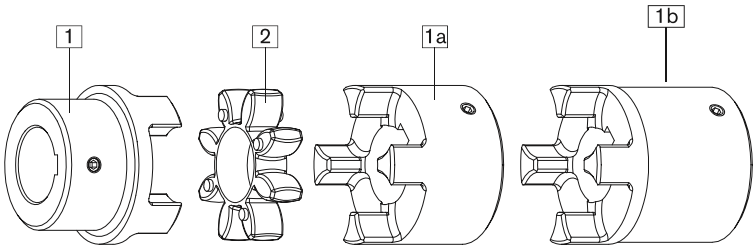

Standard hub | Spider | Large hub | Large hub lengthened

Steel (thread on the keyway)

ROTEX® Coupling hubs with test certificate [1]				
Size	Component	Material [2]	Inspection certificate acc. to DIN EN 10204	Notch impact strength
19	1a	S355 [2]	3.1	>=27 J
24	1a	S355 [2]	3.1	>=27 J
28	1a	S355 [2]	3.1	>=27 J
38	1a	S355 [2]	3.1	>=27 J
42	1	S355 [2]	3.1	>=27 J
48	1	S355 [2]	3.1	>=27 J
55	1	S355 [2]	3.1	>=27 J
65	1	S355 [2]	3.1	>=27 J
75	1	S355 [2]	3.1/3.2	>=27 J
		42CrMoS4+QT [3]		
90	1	S355 [2]	3.1/3.2	>=27 J
		42CrMoS4+QT [3]		
100	1	S355 [2]	3.1/3.2	>=27 J
		42CrMoS4+QT [3]		
110	1	S355 [2]	3.1/3.2	>=27 J
		42CrMoS4+QT [3]		
120	1	S355 [2]	3.1/3.2	>=27 J
		42CrMoS4+QT [3]		
140	1	S355 [2]	3.1/3.2	>=27 J
		42CrMoS4+QT [3]		
160	1	S355 [2]	3.1/3.2	>=27 J
		42CrMoS4+QT [3]		
180	1	S355 [2]	3.1/3.2	>=27 J
		42CrMoS4+QT [3]		

[1] S355 suitable for feather key connections, 42CrMoS4+QT for oil press-fits
[2] Notch impact strength with -40 °C
[3] Notch impact strength with -20 °C

Marine programme:
Hub materials S355J2+N and 42CrMo4+QT acc. to DIN EN 10204 - 3.1+3.2, size 75 - 180 available from stock.

UL

Use in fire pumps
ROTEX® couplings comply with the specifications of NFPA 20 standard for the installation of stationary pumps for fire protection and due to completion of the endurance tests required they also comply with the specifications of UL 448A, flexible couplings and connection shafts for stationary fire pumps.

Sizes available:

ROTEX® UL Listed								
Size	Compo-nent	Material	Spider (component 2) Rated torque [Nm] 92 ShA	Dimensions [mm]				
				Finish bore d (min. - max.)	L	l_1, l_2	E	D_H
42	1	St	265	18-55	126	50	26	95
55	1	St	410	24-74	160	65	30	120
65	1	St	625	24-80	185	75	35	135
75	1	St	1280	24-95	210	85	40	160
90	1	St	2400	30-110	245	100	45	200

* for complete dimensions see table on page 40

Taper clamping sleeve

Components

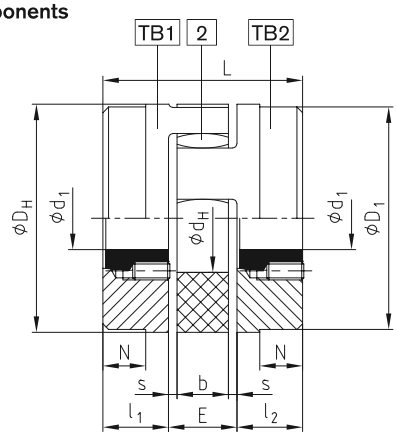

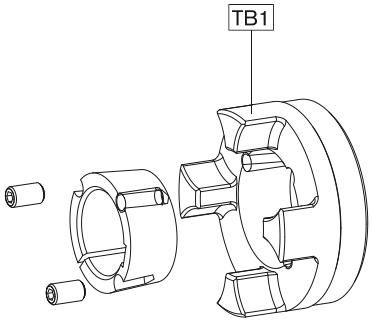

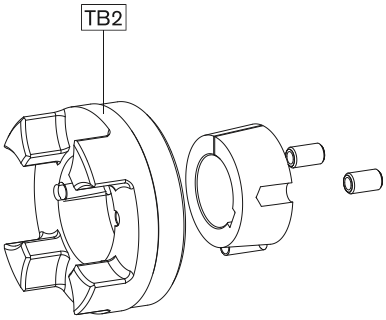

ROTEX® Shaft coupling for taper clamping sleeve														
Size	Taper clamping sleeve	Dimensions [mm]									Fastening screws for taper clamping sleeves			
		l_1, l_2	E	s	b	L	N	D_H	D_1	d_H	Size [Inch] [1]	Length [mm]	Number	T_A [Nm]
24	1008	22	18	2.0	14	62	–	55	55	27	1/4"	13	2	5.7
28	1108	23	20	2.5	15	66	–	65	65	30	1/4"	13	2	5.7
38	1108	23	24	3.0	18	70	15	80	78	38	1/4"	13	2	5.7
42	1610	26	26	3.0	20	78	16	95	94	46	3/8"	16	2	20
48	1615	39	28	3.5	21	106	28	105	104	51	3/8"	16	2	20
55	2012	33	30	4.0	22	96	20	120	118	60	7/16"	22	2	31
65	2012	33	35	4.5	26	101	19	135	115	68	7/16"	22	2	31
75	2517	52	40	5.0	30	144	36	160	158	80	1/2"	25	2	49
	• 3020										5/8"	32		92
90	3020	52	45	5.5	34	149	33	200	160	100	5/8"	32	2	92
100	3535	90	50	6	38	230	69	225	180	113	1/2"	49	3	113
125	4545	114	60	7.0	46	288	86	290	230	147	3/4"	49	3	192

Taper clamping sleeve																			
Size	Summary of bore dimensions d_1 [mm], H7 fit- feather keyway acc. to DIN 6885 sheet 1																		
1008	Ø10	Ø11	Ø12	Ø14	Ø16	Ø18	Ø19	Ø20	Ø22	Ø24	Ø25								
1108	Ø10	Ø11	Ø12	Ø14	Ø16	Ø18	Ø19	Ø20	Ø22	Ø24	Ø25	Ø28 [2]							
1610	Ø14	Ø16	Ø18	Ø19	Ø20	Ø22	Ø24	Ø25	Ø28	Ø30	Ø32	Ø35	Ø38	Ø40	Ø42 [2]				
1615	Ø14	Ø16	Ø18	Ø19	Ø20	Ø22	Ø24	Ø25	Ø28	Ø30	Ø32	Ø35	Ø38	Ø40	Ø42 [2]				
2012	Ø14	Ø16	Ø18	Ø19	Ø20	Ø22	Ø24	Ø25	Ø28	Ø30	Ø32	Ø35	Ø38	Ø40	Ø42	Ø45	Ø48	Ø50	
2517	Ø16	Ø18	Ø19	Ø20	Ø22	Ø24	Ø25	Ø28	Ø30	Ø32	Ø35	Ø38	Ø40	Ø42	Ø45	Ø48	Ø50	Ø55	Ø60
3020	Ø25	Ø28	Ø30	Ø35	Ø38	Ø40	Ø42	Ø45	Ø48	Ø50	Ø55	Ø60	Ø65	Ø70	Ø75				
3535	Ø35	Ø38	Ø40	Ø42	Ø45	Ø48	Ø50	Ø55	Ø60	Ø65	Ø70	Ø75	Ø80	Ø85	Ø90				
4545	Ø55	Ø60	Ø65	Ø70	Ø75	Ø80	Ø85	Ø90	Ø95	Ø100	Ø105	Ø110							

• Available for type TB2 only
[1] 1. BSW thread
Coupling type TB1/TB2, TB1/TB1 and TB2/TB2 possible.
Please order our separate dimension sheet (M373054).
[2] Bores with feather keyway (flat design) acc. to DIN 6885 sheet 3

Ordering example:	ROTEX® 38	92 ShA	1108	TB1 - Ø 24		TB2 - Ø 22	
	Coupling size	Spider hardness	Taper clamping sleeve	Hub type	Finish bore	Hub type	Finish bore

Clamping ring hubs

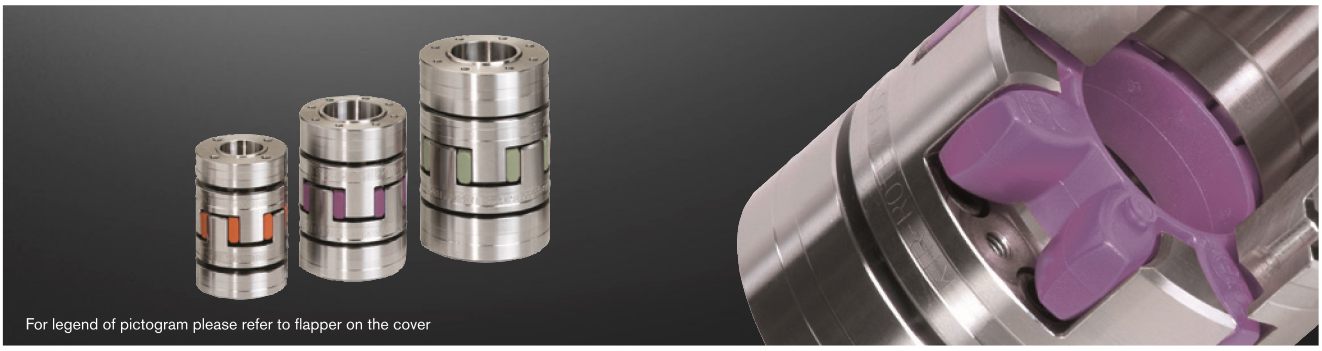

Components

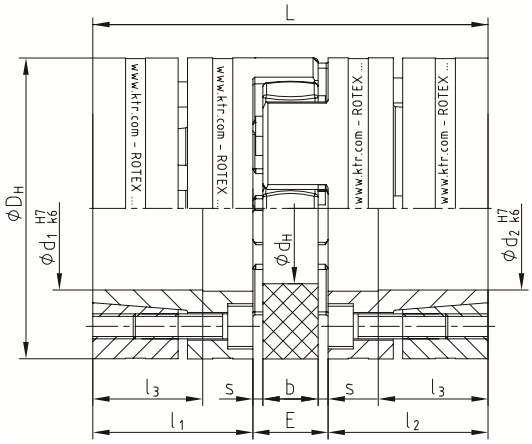

Extraction thread M_1 between clamping screws.

Clamping ring hubs steel

Size	Torques [Nm] [1] 92 ShA T_{KN}	Torques [Nm] [1] 92 ShA $T_{K\,max}$	Torques [Nm] [1] 98 ShA T_{KN}	Torques [Nm] [1] 98 ShA $T_{K\,max}$	Dimensions [mm] D_H [2]	d_H	L	l_1, l_2	l_3	E	b	s	Clamping screws M	z = number	T_A [Nm]	M_1	Weight per hub with max. bore [kg]	Mass moment of inertia per hub with max. bore [kgm²]
19	10.0	20	17	34	40	18	66	25	18	16	12	2.0	M4	6	4.1	M4	0.179	0.44×10^{-4}
24	35.0	70	60	120	55	27	78	30	22	18	14	2.0	M5	4	8.5	M5	0.399	1.91×10^{-4}
28	95.0	190	160	320	65	30	90	35	27	20	15	2.5	M5	8	8.5	M5	0.592	4.18×10^{-4}
38	190.0	380	325	650	80	38	114	45	35	24	18	3.0	M6	8	14	M6	1.225	12.9×10^{-4}
42	265	530	450	900	95	46	126	50	35	26	20	3.0	M8	4	35	M8	2.30	31.7×10^{-4}
48	310	620	525	1050	105	51	140	56	41	28	21	3.5	M10	4	69	M10	3.08	52.0×10^{-4}
55	375	750	685	1370	120	60	160	65	45	30	22	4.0	M10	4	69	M10	4.67	103.0×10^{-4}
65	—	—	940	1880	135	68	185	75	55	35	26	4.5	M12	4	120	M12	6.70	191.0×10^{-4}
75	—	—	1920	3840	160	80	210	85	63	40	30	5.0	M12	5	120	M12	9.90	396.8×10^{-4}
90	—	—	3600	4500	200	104	245	100	75	45	34	5.5	M16	5	295	M16	17.70	1136×10^{-4}

Bore d_1/d_2 and the respective transmittable friction torques T_R of clamping ring hub in [Nm] [1]

Size	Ø10	Ø11	Ø14	Ø15	Ø16	Ø19	Ø20	Ø24	Ø25	Ø28	Ø30	Ø32	Ø35	Ø38	Ø40	Ø42	Ø45	Ø48	Ø50	Ø55*	Ø60*	Ø65*	Ø70*	Ø80*	Ø90*	Ø95*	Ø100*	Ø105*
19	27	32	69	84	57	94	110																					
24			70	87	56	97	114	116	133	192																		
28				108	131	207	148	253	285	315	382	330	433	503														
38							208	353	395	439	531	463	603	593	689	793	776											
42									445	495	595	526	678	671	775	718	872	1043	1061									
48											616	704	899	896	1030	962	1160	1379	1222	1543								
55													863	856	991	918	1119	1110	1247	1277	1665	1605	2008					
65															1446	1355	1637	1635	1827	1887	2429	2368	2930					
75																1710	2053	2059	2294	2384	3040	2983	3664	4293				
90																			3845	4249	4794	5858	5900	7036	8047	9247	9575	10845

[1] For selection see page 14 et seqq.
[2] $ØD_H$ + 2 mm with high speeds for expansion of spider
The transmittable torques of the clamping connection include the max. fitting tolerance with shaft clearance k6/bore H7, from Ø55 G7/m6. The torque is reduced with bigger fitting tolerance. For the strength calculation of shaft/hollow shaft see KTR standard 45510 at our homepage www.ktr.com.

Ordering example:	ROTEX® GS 24	98 ShA	6.0 steel	Ø24	6.0 steel	Ø20
	Coupling size	Spider hardness	Hub type	Finish bore	Hub type	Finish bore

Clamping hubs

Components

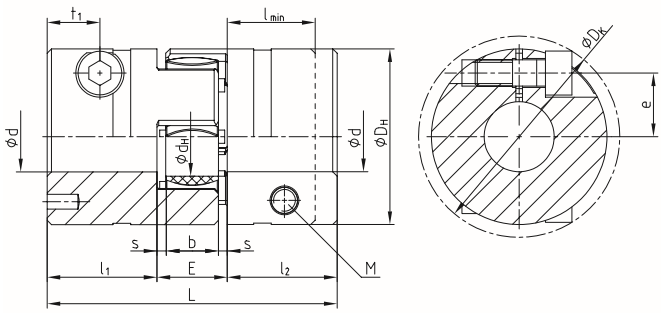

ROTEX® 19 - 28

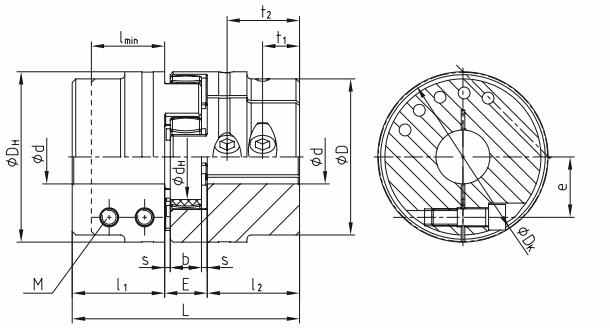

ROTEX® 38 - 90

ROTEX® as clamping hubs																
Size	Dimensions [mm]														Screw DIN EN ISO 4762	
	Max. d	L	l_1, l_2	$l_{min.}$	E	b	s	D_H	D	d_H	D_K	t_1	t_2	e	M	T_A [Nm]
19	20 [1]	66	25	20	16	12	2.0	40	-	18	46.0	12	—	14.5	M6	14
24	28	78	30	25	18	14	2.0	55	-	27	57.5	12	—	20.0	M6	14
28	38	90	35	30	20	15	2.5	65	-	30	73.0	14 [2]	—	25.0	M8	35
38	42	114	45	35	24	18	3.0	80	70	38	77.5	19	—	26.5	M8	35
42	50	126	50	42	26	20	3.0	95	85	46	93.5	18 [2]	—	32.0	M10	69
48	55	140	56	46	28	21	3.5	105	95	51	105.0	21 [2]	—	36.0	M12	120
55	68	160	65	50	30	22	4.0	120	110	60	119.5	26	51 [2]	42.5 [3]	M12	120
65	70	185	75	55	35	26	4.5	135	115	68	132.5	33	61 [2]	50.0 [3]	M12	120
75	80	210	85	65	40	30	5.0	160	135	80	158.0	36	68 [2]	57.0 [3]	M16	295
90	90	245	100	80	45	34	5.5	200	160	100	197.0	40	80 [2]	72.0 [3]	M20	580

Bore d_1/d_2 and the respective transmittable friction torques T_R [Nm] of ROTEX® clamping hubs design 2.0																														
Size	Ø8	Ø10	Ø11	Ø14	Ø15	Ø16	Ø18	Ø19	Ø20	Ø22	Ø24	Ø25	Ø28	Ø30	Ø32	Ø35	Ø38	Ø40	Ø42	Ø45	Ø48	Ø50	Ø55	Ø60	Ø65	Ø70	Ø75	Ø80	Ø85	Ø90
19	44	46	47	51	52	53	55	57	58																					
24		59	60	64	65	66	68	70	71	73	76	77	80																	
28				139	141	144	148	150	152	157	161	163	170	174	178	185	191													
38					163	165	170	172	174	178	183	185	192	196	200	207	213	217	222											
42									291	297	304	308	318	325	332	342	353	360	367	377	387	394								
48									466	476	486	491	506	516	526	542	557	567	577	592	607	618	643							
55															1185	1215	1245	1266	1286	1316	1347	1367	1417	1468	1519					
65																1316	1347	1367	1387	1417	1448	1468	1519	1569	1620	1671				
75																			2869	2926	2983	3022	3117	3213	3309	3404	3500	3595		
90																			5220	5310	5400	5460	5610	5760	5910	6060	6210	6360	6510	6660

[1] With type 2.1 $d_{max.}$ Ø17 mm
[2] With reduced hubs dimension t_1 varies or the number of screws changes from 2-off to 1-off
[3] t_1 and t_2 have a different dimension e

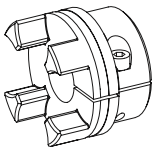

Type 2.0
Clamping hub single slot without feather keyway

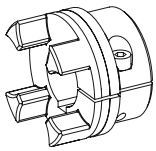

Type 2.1
Clamping hub single slot with feather keyway

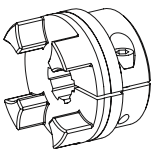

Type 2.3
Clamping hub with spline bore (For a selection of our programme of spline bores see page 36)

Ordering example:

ROTEX® 24	98 ShA	2.1	Ø24	2.0	Ø20
Coupling size	Spider hardness	Hub type	Finish bore	Hub type	Finish bore

ROTEX® AFN and BFN
Flexible jaw couplings

Flange programme

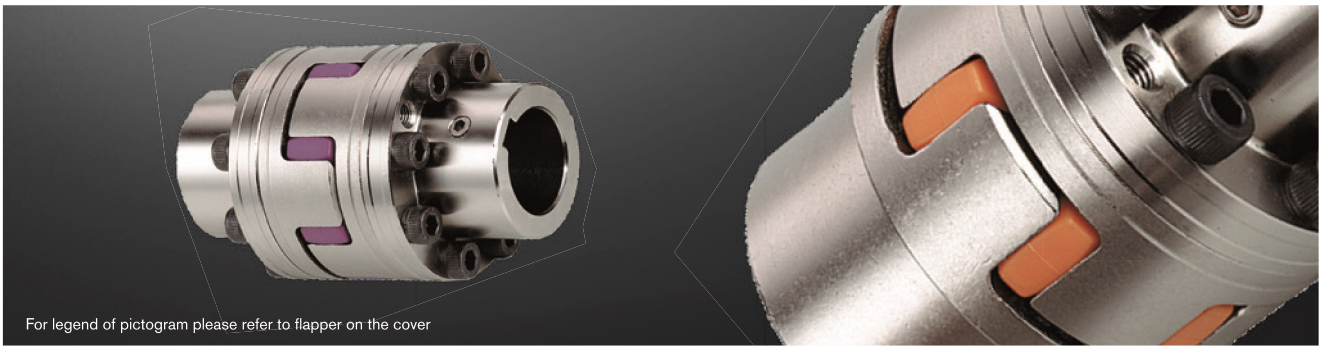

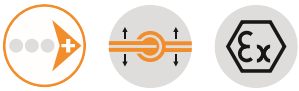

Components

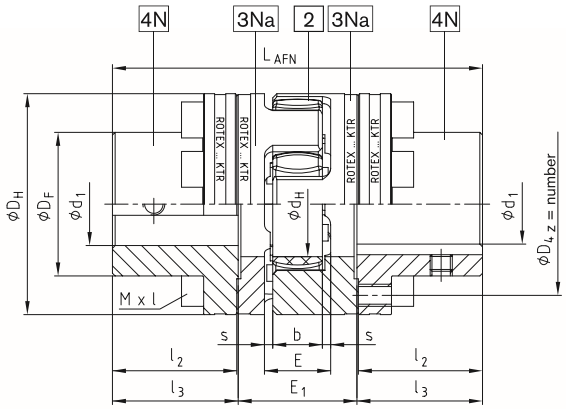

Type AFN

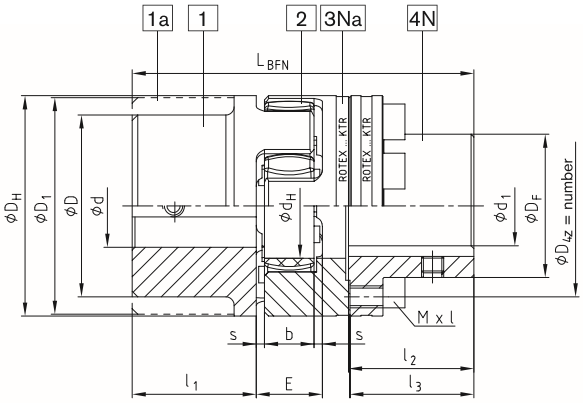

Type BFN

ROTEX® Type AFN and BFN																		
Size	Pilot bore d, D, D_1	Component 4N max. finish bore d_1	Dimensions [mm]												Cap screws [3] DIN EN ISO 4762 - 12.9			
			D_H	D_F	D_4	d_H	l_1, l_2	E	E_1	s	b	l_3, l_4	L_{AFN}	L_{BFN}	Mxl	z	pitch [2]	T_A [1] [Nm]
24	See jaw couplings on page 34 to 36 / For stock programme / basic programme see page 32 and 33	27	55	36	45	27	30	18	33	2.0	14	30.5	94	86	M5x16	8		10
28		30	65	42	54	30	35	20	39	2.5	15	35.5	110	100	M6x20	8	8x45°	17
38		38	80	52	66	38	45	24	43	3.0	18	45.5	134	124	M8x22	8		41
42		45	95	62	80	46	50	26	48	3.0	20	51.0	150	138	M8x25	12	16x22.5°	41
48		50	105	70	90	51	56	28	50	3.5	21	57.0	164	152	M8x25	12		41
55		60	120	80	102	60	65	30	60	4.0	22	66.0	192	176	M10x30	8	8x45°	83
65		70	135	94	116	68	75	35	65	4.5	26	76.0	217	201	M10x30	12	16x22.5°	83
75		80	160	108	136	80	85	40	75	5.0	30	86.5	248	229	M12x40	15		120
90		105	200	142	172	100	100	45	82	5.5	34	101.5	285	265	M16x40	15		295
100		115	225	158	195	113	110	50	97	6.0	38	111.5	320	295	M16x50	15		295
110		130	255	178	218	127	120	55	103	6.5	42	122.0	347	321	M20x50	15	20x18°	580
125		150	290	206	252	147	140	60	116	7.0	46	142.0	400	370	M20x60	15		580
140		170	320	235	282	165	155	65	128	7.5	50	157.5	443	409	M20x60	15		580
160		200	370	270	325	190	175	75	146	9.0	57	177.5	501	463	M24x70	15		1000
180		230	420	315	375	220	195	85	159	10.5	64	198.0	555	515	M24x80	18	24x15°	1000

[1] Screw tightening torque T_A [Nm].
[2] Thread in the driving flange between the cams.
[3] Coupling is delivered not assembled.

Ordering example:	ROTEX® 24	AFN	92 ShA	4N	Ø38	4N	Ø35
	Coupling size	Type	Spider hardness	Component	Finish bore	Component	Finish bore

Drop-out center design coupling

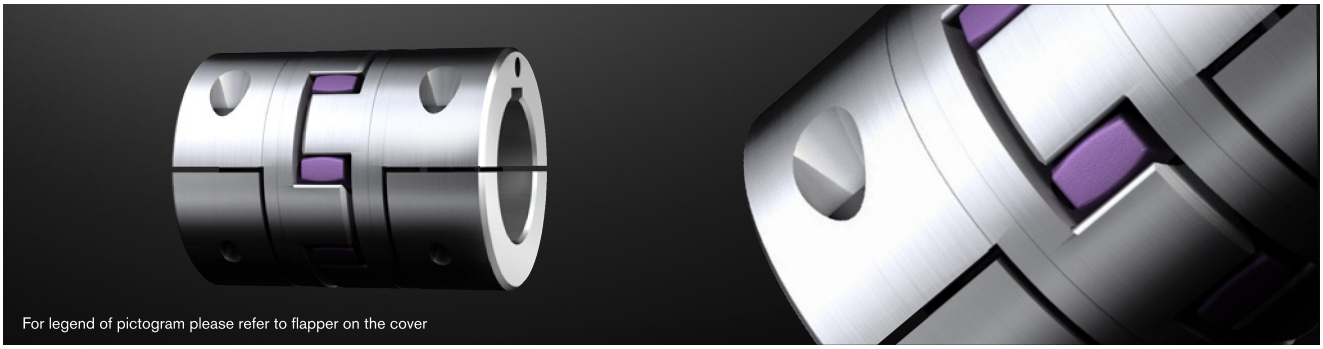

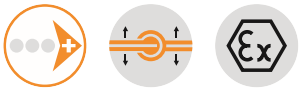

Components

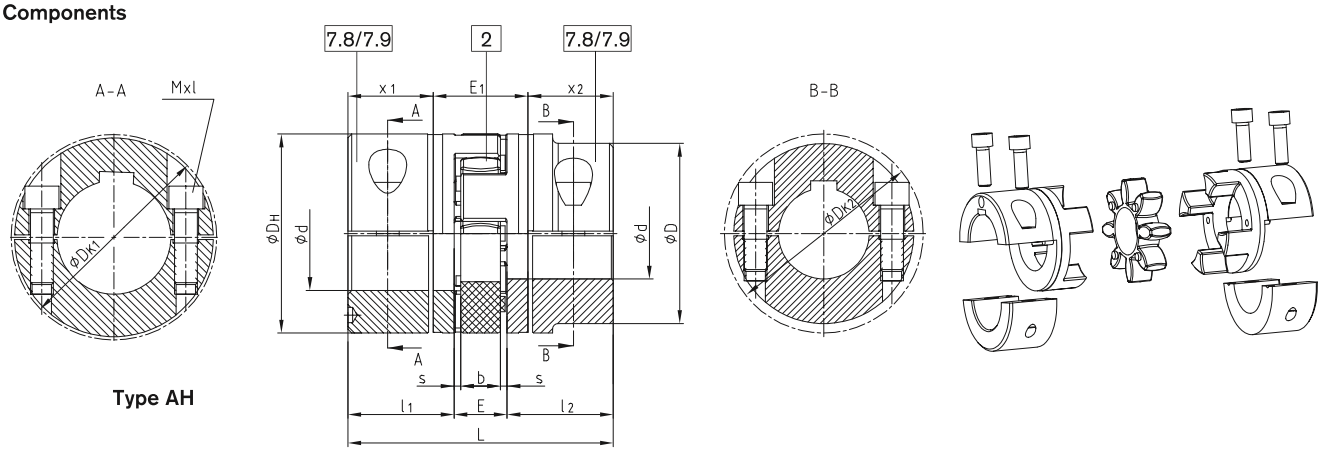

Type AH

ROTEX® Type AH														
Size	Max. finish bore d	Dimensions [mm]											Cap screws DIN EN ISO 4762	
		L	l_1, l_2	E	b	s	D_H	D	D_{K1}	D_{K2}	x_1, x_2	E_1	MxI	Tightening torque T_A [Nm]
19	20	66	25	16	12	2.0	40	—	46	—	17.5	31	M6x16	14
24	28	78	30	18	14	2.0	55	—	57.5	—	22.5	33	M6x20	14
28	38	90	35	20	15	2.5	65	—	73	—	25.5	39	M8x25	35
38	45	114	45	24	18	3.0	80	—	83.5	—	35.5	43	M8x30	35
42	50	126	50	26	20	3.0	95	85	—	93.5	39	48	M10x30	69
	55							—	97	—			M10x35	
48	55	140	56	28	21	3.5	105	95	—	105	45	50	M12x35	120
	60							—	108.5	—			M12x40	
55	65	160	65	30	22	4.0	120	110	—	119.5	50	60	M12x40	120
	70							—	122	—			M12x45	
65	70	185	75	35	26	4.5	135	115	—	123.5	60	65	M12x40	120
	80							—	132.5	—			M12x45	
75	80	210	85	40	30	5.0	160	135	—	147.5	67.5	75	M16x50	295
	90							—	158	—				
90	90	245	100	45	34	5.5	200	160	—	176	81.5	82	M20x60	580
	110							—	197	—				
100 [1]	110	270	110	50	38	6.0	225	180	—	185.5	84	102	M16x50	295
110 [1]	120	295	120	55	42	6.5	255	200	—	208	90	115	M20x60	580
125 [1]	140	340	140	60	46	7.0	290	230	—	242.5	105	130	M24x70	1000

CAUTION:
With maximum bore the feather keyways are offset to each other by approx. 5°!
Hub material up to size 90: steel, from size 100: GJS

7.8 = Half shell clamping hub without feather keyway max. circumferential speed of v = 35 m/s.
From a circumferential speed of v = 25 m/s the frictional torque of shaft/hub has to be reviewed. Please consult with KTR.
7.9 = Half shell clamping hub with feather keyway max. circumferential speed of v = 35 m/s. From a circumferential speed of v = 25 m/s dynamic balancing is required.

Speed: max. circumferential speed of 25 m/s on the outside diameter D_H of the coupling
[1] From size 100: 4 clamping screws for each clamping hub

Ordering example:	ROTEX® 38	AH	98 ShA	7.8	Ø38	7.8	Ø30
	Coupling size	Type	Spider hardness	Hub type	Finish bore	Hub type	Finish bore

ROTEX® SH
Flexible jaw couplings

Landing page

Drop-out center design coupling with SPLIT hubs

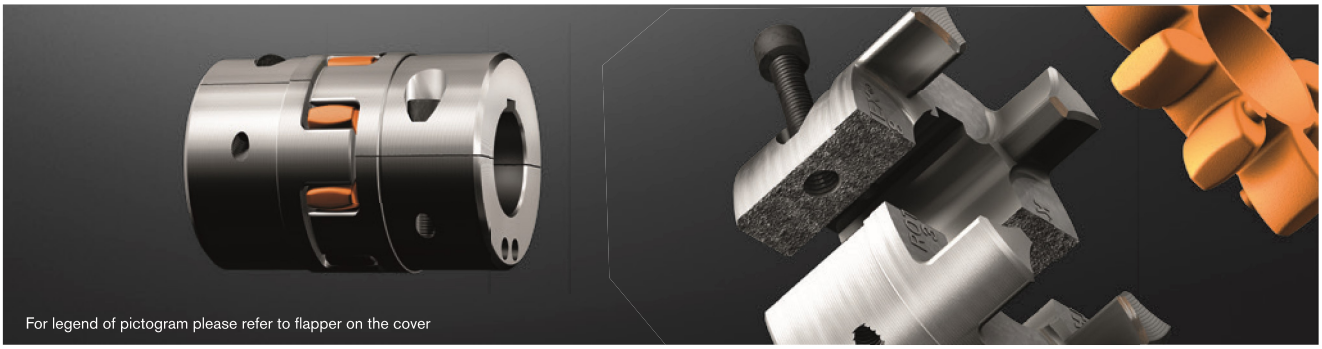

Components

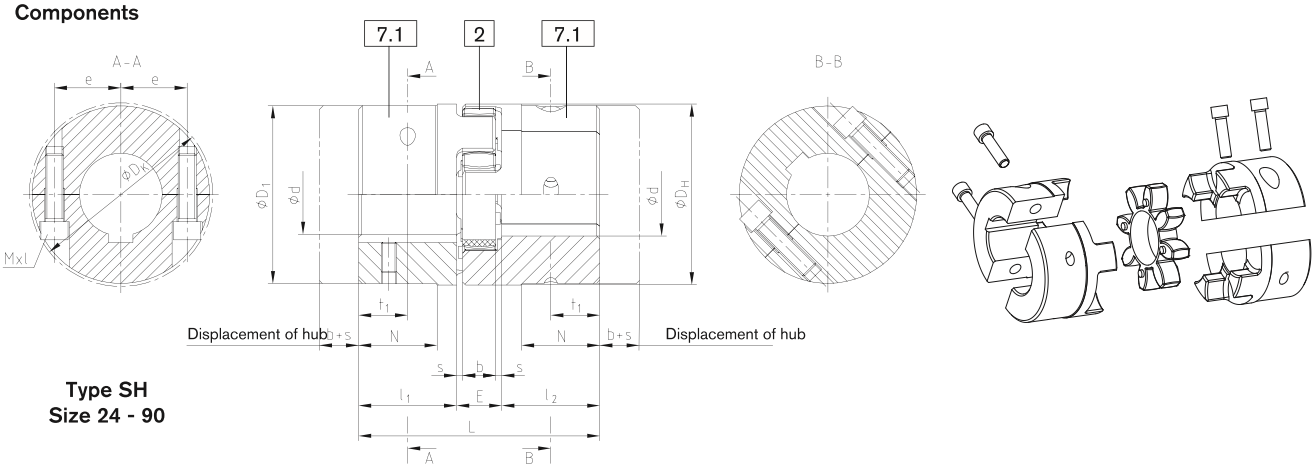

ROTEX® Type SH Powder metal steel (Sint)																	
Size	Finish bore d		Dimensions [mm]													Cap screws DIN EN ISO 4762	
	Min.	Max.	L	l_1, l_2	E	b	s	D_H	D_1	D_K	N	e	t_1	t_2	G	Mxl	Tightening torque T_A [Nm]
24	0	24	78	30	18	14	2	55	-	57.5	-	20	15	10	M5	M6x20	14
28	0	38	90	35	20	15	2.5	65	-	73	-	25	17.5	15	M8	M8x25	34

ROTEX® Type SH Cast iron (GJL)																	
Size	Finish bore d		Dimensions [mm]													Cap screws DIN EN ISO 4762	
	Min.	Max.	L	l_1, l_2	E	b	s	D_H	D_1	D_K	N	e	t_1	t_2	G	Mxl	Tightening torque T_A [Nm]
38	24	45	114	45	24	18	3	80	78	83.5	37	30	22.5	15		M8x30	34
42	24	55	126	50	26	20	3	95	94	97	40	30	25		M8	M10x35	67
48	24	60	140	56	28	21	3.5	105	104	108.5	45	35	28			M12x40	115
55	24	70	160	65	30	22	4	120	118	122	52	40	32.5	20		M12x45	115
65	24	70	185	75	35	26	4.5	135	115	123.5	61	45	37.5			M12x40	115
	70	80							135	132.5		50			M10	M12x45	
75	40	80	210	85	40	30	5	160	135	147	69	51	42.5	25		M16x50	290
	80	90							160	158		57					
90	40	90	245	100	45	34	5.5	200	160	176	81	60	50	30	M12	M20x60	560
	90	110							200	197		72					

7.1 = SPLIT hub with feather keyway

Ordering example:	ROTEX® 38	SH	98 ShA	7.1	Ø38	7.1	Ø30
	Coupling size	Type	Spider hardness	Hub type	Finish bore	Hub type	Finish bore

Single-cardanic shaft coupling (Non Sparking)

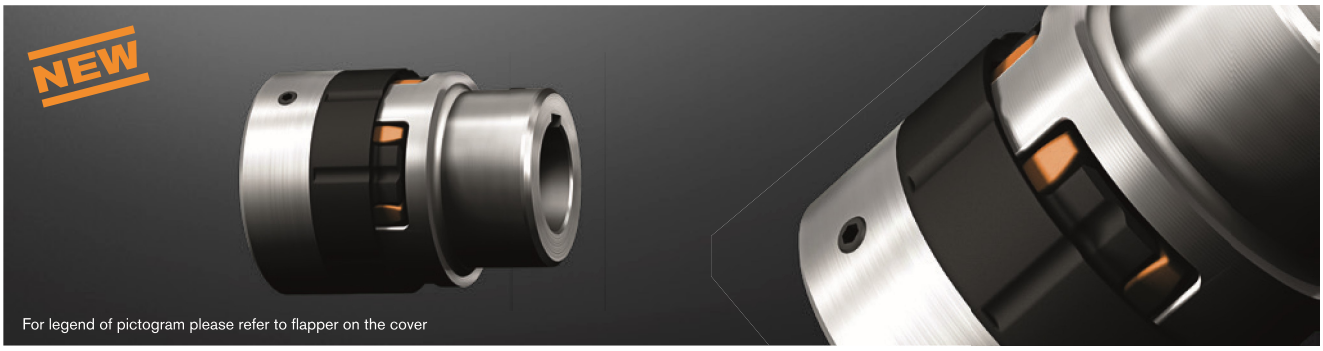

Components

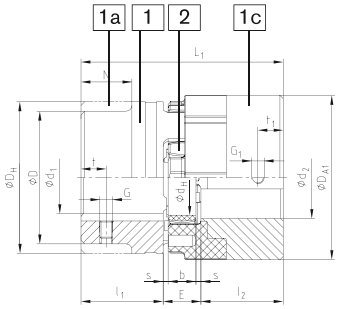

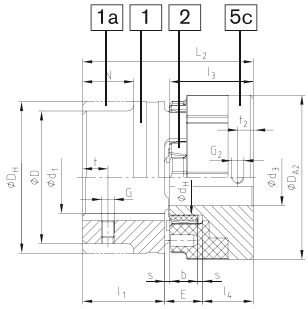

ROTEX® Standard (St) [3]			ROTEX® SP Type GN							ROTEX® SP Type EN							
Size	Spider [1] (component 2) Rated torque [Nm]	Component steel (St)	Component SP	Dimensions [mm] ROTEX® SP component 1c						Component SP	Dimensions [mm] ROTEX® SP component 5c						
				max. d_2 [2]	l_2	D_{A1}	G_1	t_1	L_1		max. d_2 [2]	l_3	l_4	D_{A2}	G_2	t_2	L_2
24	35	1a	1c	28	30	61	M5	10	78	5c	19	36	22	61	M5	6	70
		1b							98								90
28	95	1a	1c	32	35	72	M8	15	90	5c	22	42	26	72	M8	7	81
		1b							115								106
38	190	1	1c	42	45	87	M8	15	114	5c	28	50	30	87	M8	7	99
		1b							139								124
42	265	1	1c	48	50	103	M8	20	126	5c	35	56	34	103	M8	10	110
		1b							151								135
48	310	1	1c	55	56	114	M8	20	140	5c	40	60	36	114	M8	10	120
		1b							164								124
55	410	1	1c	65	65	130	M10	20	160	5c	45	66	40	130	M10	17	135
		1b							185								160
65	625	1	1c	75	75	146	M10	20	185	5c	55	75	44	146	M10	17	154
		1b							210								179

ROTEX® Standard (GJL) [4]			ROTEX® SP Type GN							ROTEX® SP Type EN							
Size	Spider [1] (component 2) Rated torque [Nm]	Component cast iron (GJL)	Component SP	Dimensions [mm] ROTEX® SP component 1c						Component SP	Dimensions [mm] ROTEX® SP component 5c						
				max. d_2 [2]	l_2	D_A	G	t	L		max. d_2 [2]	l_2	l_3	D_A	G	t_1	L_1
38	190	1	1c	42	45	87	M8	15	114	5c	28	50	30	87	M8	7	99
		1a															
		1b							139								124
42	265	1	1c	48	50	103	M8	20	126	5c	35	56	34	103	M8	10	110
		1a															
		1b							151								135
48	310	1	1c	55	56	114	M8	20	140	5c	40	60	36	114	M8	10	120
		1a															
		1b							164								144
55	410	1	1c	65	65	130	M10	20	160	5c	45	66	40	130	M10	17	135
		1a															
65	625	1	1c	75	75	146	M10	20	185	5c	55	75	44	146	M10	17	154

[1] Maximum torque of the coupling $T_{K\,max}$ = rated torque of the coupling $T_{K\,rated}$ x 2. Transmittable torque according to 92 ShA.
[2] Bores H7 with keyway to DIN 6885 sheet 1 [JS9] and setscrew
[3] For dimensions of standard ROTEX® hubs (St) 1, 1a, 1b see catalogue on page 40.
[4] For dimensions of standard ROTEX® hubs (GJL) 1, 1a, 1b see catalogue on page 38.
= Available from stock

Ordering example:	ROTEX® SP 38	GJL	92 ShA	1a	Ø45	1c	Ø42
	Coupling size	Material Components 1, 1a, 1b	Spider hardness	Component	Finish bore	Component	Finish bore

ROTEX® SP ZS-DKM-C
Flexible jaw couplings

Double-cardanic shaft coupling (Non Sparking)

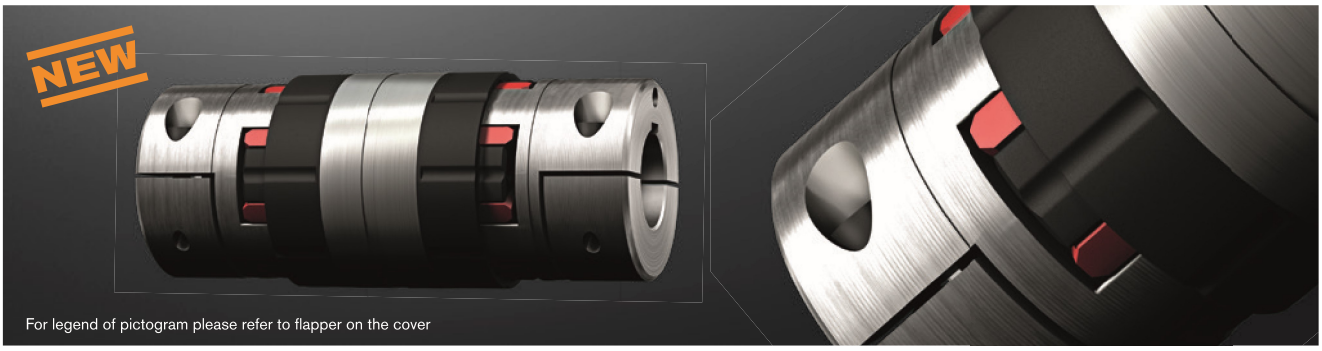

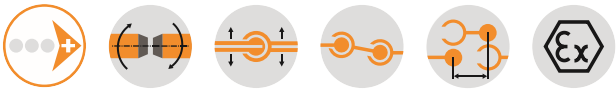

Components

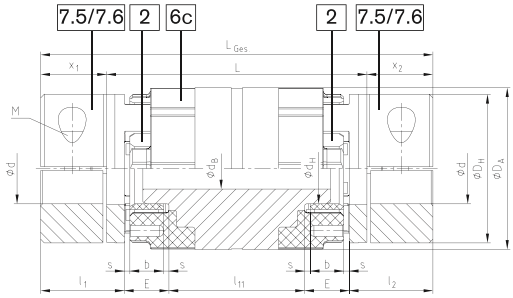

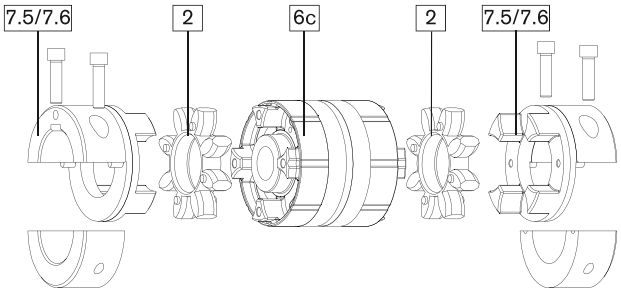

ROTEX® SP Type ZS-DKM-C																
Size	Drop-out center length L	Spider [1] (component 2) Rated torque [Nm]	Dimensions [mm] General component 7.5/7.6 steel												Dimensions [mm] ROTEX® SP Type 6c Al-H [3]	
			Max. finish bore d [2]	L_{total}	l_1, l_2	x_1, x_2	E	b	s	D_H	D_A	d_H	M	T_A [Nm]	d_B	l_{11}
24	100	35	28	145	30	22.5	18	14	2.0	55	61	27	M6	14	14	49
	140			185												89
28	100	95	38	151	35	25.5	20	15	2.5	65	72	30	M8	35	16	41
	140			191												81
38	100	190	45	171	45	35.5	24	18	3.0	80	87	38	M8	35	22	33
	140			211												73
42	100	265	55	178	50	39	26	20	3.0	95	103	46	M10	69	30	26
	140			218												66
48	140	310	60	230	56	45	28	21	3.5	105	114	51	M12	120	35	62
55	140	410	70	240	65	50	30	22	4.0	120	130	60	M12	120	35	50
	180			280												90
	200			300												110
65	140	625	80	260	75	60	35	26	4.5	135	146	68	M12	120	48	40
	180			300												50

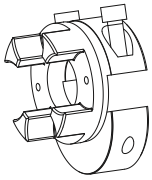

Type 7.5 clamping hub type DH
without feather keyway for double-cardanic connection

Type 7.6 clamping hub type DH
with feather keyway for double-cardanic connection

[1] Maximum torque of the coupling $T_{K\ max}$ = rated torque of the coupling $T_{K\ rated}$ x 2. Transmittable torque according to 92 ShA-GS.
[2] Hub type 7.5 = without keyway; hub type 7.6 = with keyway acc. to DIN 6685 sheet 1 [JS9]
[3] Size 42 with drop-out center length L=100 mm made of steel
■ = Available from stock

Ordering example:

ROTEX® SP 38	ZS-DKM-C	140	98 ShA-GS	7.5	Ø38	7.5	Ø30
Coupling size	Type	Drop-out center length L	Spider hardness	Hub type	Finish bore	Hub type	Finish bore

Double-cardanic shaft coupling

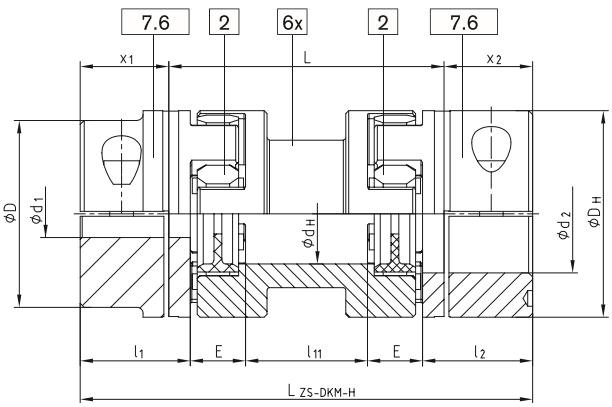

Type ZS-DKM-H

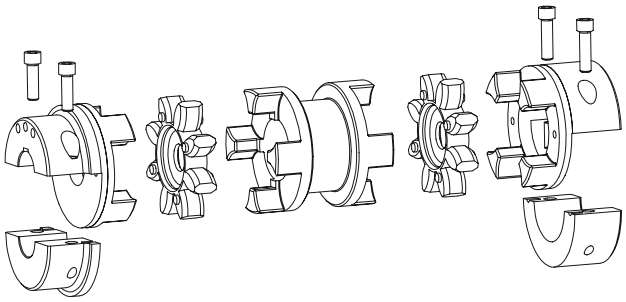

ROTEX® Type ZS-DKM-H																		
Size	Drop-out center length L [mm]	Max. finish bore d_1, d_2	Spider [1] (component 2) T_{KN} [Nm]	Dimensions [mm]							Screws DIN EN ISO 4762 - 12.9		Max. displacements					Weight [2] [kg]
				D_H	d_H	l_1, l_2	x_1, x_2	l_{11}	E	$L_{ZS-DKM-H}$	M	T_A [Nm]	Axial [mm]	with n = 1500 rpm		with n = 3000 rpm		
														Radial [mm]	Angular [°]	Radial [mm]	Angular [°]	
24	100	28	35	55	27	30	22.5	49	18	145	M6	14	1.4	1.17		0.87		1.40
	140							89		185				1.87		1.40		1.60
28	100	38	95	65	30	35	25.5	41	20	151	M8	35	1.5	1.06		0.80		1.90
	140							81		191				1.76		1.32		2.20
38	100	45	190	80	38	45	35.5	33	24	171	M8	35	1.8	0.99		0.74		3.90
	140							73		211				1.69		1.27		4.10
42	100	55	265	95	46	50	39.0	26	26	178	M10	69	2.0	0.91		0.68		5.10
	140							66		218				1.60		1.20		5.70
48	100	60	310	105	51	56	45.0	22	28	190	M12	120	2.1	0.87		0.65		7.10
	140							62		230				1.57		1.18		7.90
55	100	70	410	120	60	65	50.0	10	30	200	M12	120	2.2	0.70	1.0	0.52	0.75	9.50
	140							50		240				1.40		1.05		11.20
	180							90		280				2.09		1.57		12.30
	200							110		300				2.44		1.83		12.80
65	140	80	625	135	68	75	60.0	40	35	260	M12	120	2.6	1.31		0.98		16.10
	180							80		300				2.00		1.50		16.80
75	140	90	1280	160	80	85	67.5	25	40	275	M16	295	3.0	1.13		0.85		23.60
	180							65		315				1.83		1.37		26.00
	200							85		335				2.19		1.64		27.00
	250							135		385				3.05		2.29		29.50
90	180	110	2400	200	100	100	81.5	53	45	343	M20	580	3.4	1.71		1.28		48.90
	250							123		413				2.93		2.19		52.60
100	250	110	3300	225	105	110	84	98	50	418	M16	295	3.4	2.6		-	-	60
110	250	120	4800	255	115	120	88	76	55	426	M20	580	3.4	2.3		-	-	90
125	250	140	6650	290	133	140	105	60	60	460	M24	1000	3.4	1.6		-	-	120

[1] Maximum torque of the coupling $T_{K\,max}$ = rated torque of the coupling $T_{K\,rated}$ x 2.
Size 24 to 90 spider type 98 ShA-GS / transmittable torque acc. to 92 ShA-GS.

7.6 = Half shell clamping hub with feather keyway for a double-cardanic connection
ATTENTION: The standard series can be used with horziontal mounting only. Vertical assembly on request.

Ordering example:	ROTEX® 38	ZS-DKM-H	140	98 ShA-GS	7.6	Ø 38	7.6	Ø30
	Coupling size	Type	Shaft distance dimension L	Spider hardness	Hub type	Finish bore	Hub type	Finish bore

Double-cardanic shaft coupling

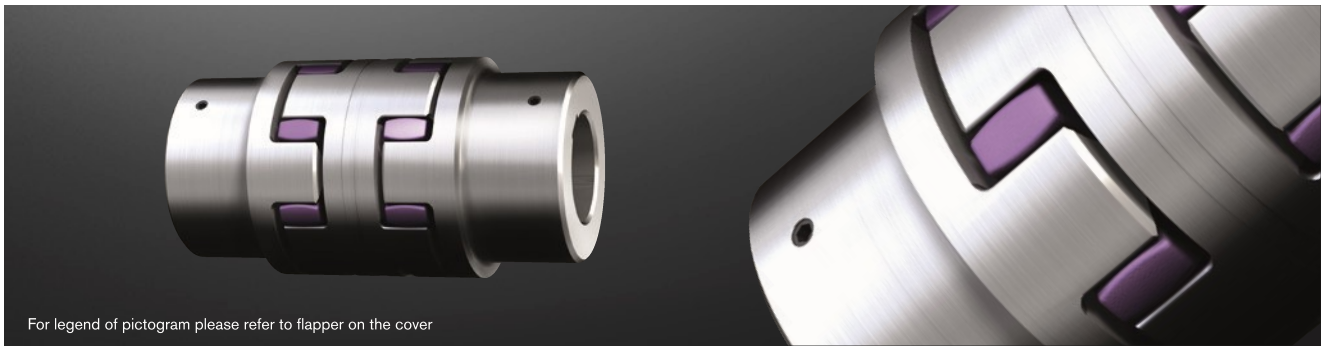
For legend of pictogram please refer to flapper on the cover

Components

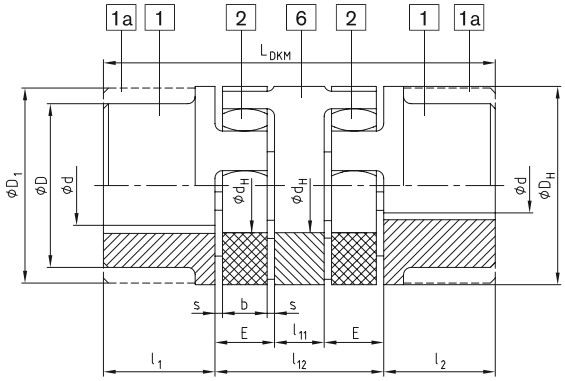

Type DKM

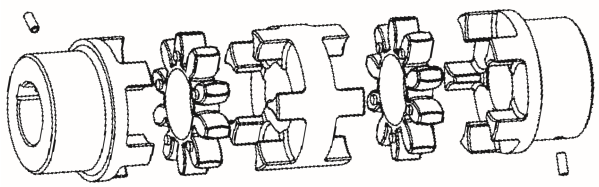

ROTEX® Type DKM															
Size	d, D, D_1	Spider [1] (component 2) Rated torque [Nm]		Dimensions [mm]									Max. displacements with n = 1500 rpm		
		92 ShA	98 ShA	D_H	d_H	l_1, l_2	l_{11}	l_{12}	E	s	b	L_{DKM}	Radial [mm]	Angular [°]	Axial [mm]
19	See jaw couplings on page 34 to 36 / For stock programme / basic programme see page 32 and 33	10	17	40	18	25	10	42	16	2.0	12	92	0.45	1.0	+1.2/-1.0
24		35	60	55	27	30	16	52	18	2.0	14	112	0.59	1.0	+1.4/-1.0
28		95	160	65	30	35	18	58	20	2.5	15	128	0.66	1.0	+1.5/-1.4
38		190	325	80	38	45	20	68	24	3.0	18	158	0.77	1.0	+1.8/-1.4
42		265	450	95	46	50	22	74	26	3.0	20	174	0.84	1.0	+2.0/-2.0
48		310	525	105	51	56	24	80	28	3.5	21	192	0.91	1.0	+2.1/-2.0
55		410	685	120	60	65	28	88	30	4.0	22	218	1.01	1.0	+2.2/-2.0
65		625	940	135	68	75	32	102	35	4.5	26	252	1.17	1.0	+2.6/-2.0
75		1280	1920	160	80	85	36	116	40	5.0	30	286	1.33	1.0	+3.0/-3.0
90		2400	3600	200	100	100	40	130	45	5.5	34	330	1.48	1.0	+3.4/-3.0

[1] For selection see page 14 et seqq.
Finish bore according to ISO fit H7, feather keyway according to DIN 6885, sheet 1 [JS9].

Ordering example:	ROTEX® 38	DKM	GJL	98 ShA	1	Ø38	1	Ø30
	Coupling size	Type	Material	Spider hardness	Component	Finish bore	Component	Finish bore

ROTEX® CF, CFN, DF and DFN
Flexible jaw couplings

Flange programme

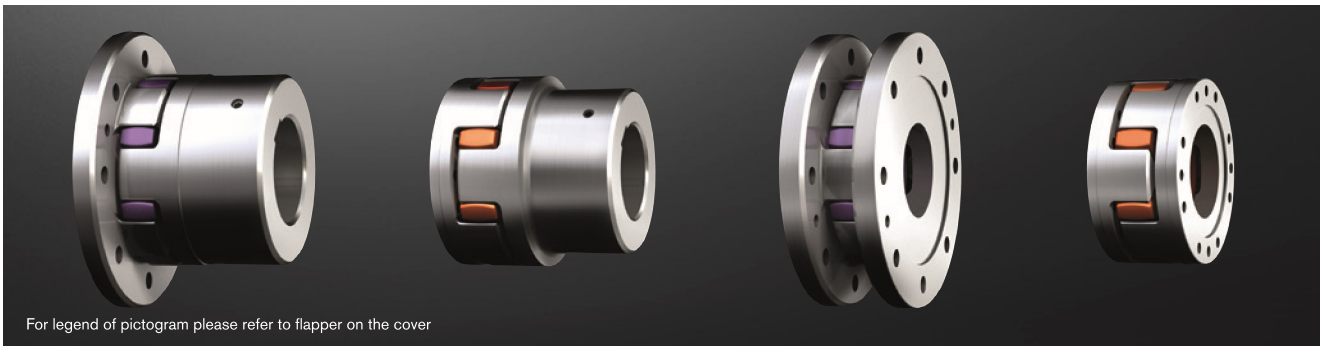

Components

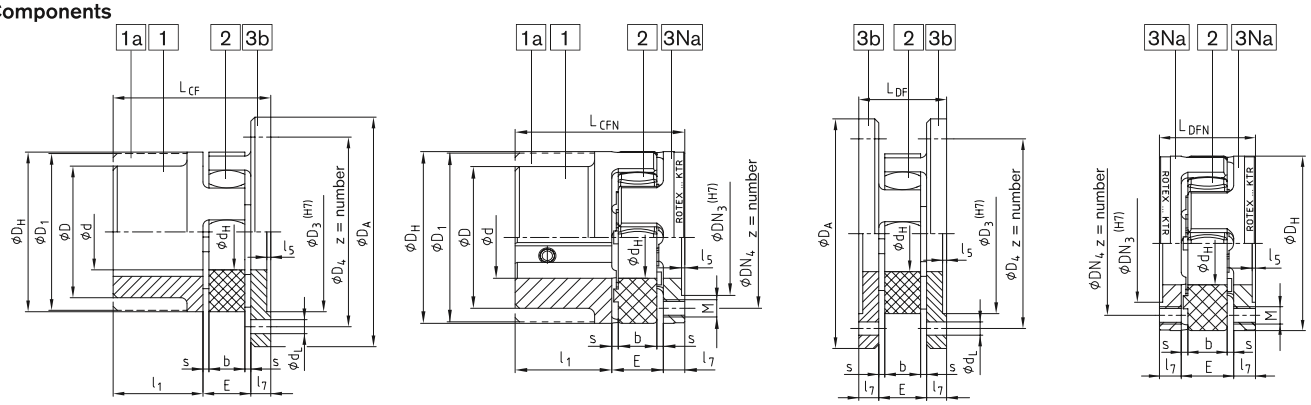

Type CF | Type CFN | Type DF | Type DFN

ROTEX® Type CF, CFN and DF, DFN																						
Size	d, D, D_1	Dimensions general [mm]								Dimensions CF and DF [mm]							Dimensions CFN and DFN [mm]						
		D_H	d_H	l_1	E	s	b	l_5	l_7	D_A	D_3	D_4	z	d_L	L_{CF}	L_{DF}	D_{N3}	D_{N4}	M	z	Pitch	L_{CFN}	L_{DFN}
24	See jaw couplings on page 38 to 40 / For stock programme / basic programme see page 36	55	27	30	18	2.0	14	1.5	8	80	55	65	5	4.5	56	34	36	45	M5	8		56	34
28		65	30	35	20	2.5	15	1.5	10	100	65	80	6	6.6	65	40	44	54	M6	8	8x45°	65	40
38		80	38	45	24	3.0	18	1.5	10	115	80	95	6	6.6	79	44	54	66	M8	8		79	44
42		95	46	50	26	3.0	20	2.0	12	140	95	115	6	9.0	88	50	65	80	M8	12	16x22.5°	88	50
48		105	51	56	28	3.5	21	2.0	12	150	105	125	8	9.0	96	52	75	90	M8	12		96	52
55		120	60	65	30	4.0	22	2.0	16	175	120	145	8	11.0	111	62	84	102	M10	8	8x45°	111	62
65		135	68	75	35	4.5	26	2.0	16	190	135	160	10	11.0	126	67	96	116	M10	12	16x22.5°	126	67
75		160	80	85	40	5.0	30	2.5	19	215	160	185	10	13.5	144	78	112	136	M12	15		144	78
90		200	100	100	45	5.5	34	3.0	20	260	200	225	12	13.5	165	85	145	172	M16	15		165	85
100		225	113	110	50	6.0	38	4.0	25	285	225	250	12	13.5	185	100	165	195	M16	15		185	100
110		255	127	120	55	6.5	42	4.0	26	330	255	290	12	18.0	201	107	180	218	M20	15	20x18°	201	107
125		290	147	140	60	7.0	46	5.0	30	370	290	325	16	18.0	230	120	215	252	M20	15		230	120
140		320	165	155	65	7.5	50	5.0	34	410	320	360	16	22.0	254	133	245	282	M20	15		254	133
160		370	190	175	75	9.0	57	5.0	38	460	370	410	16	22.0	288	151	280	325	M24	15		288	151
180		420	220	195	85	10.5	64	5.5	40	520	420	465	16	26.0	320	165	330	375	M24	18	24x15°	320	165

For other flange programmes see page 45.

Other types: ROTEX® CF-H
Flange drop-out center design coupling
Please order our separate dimension sheet (M412069).

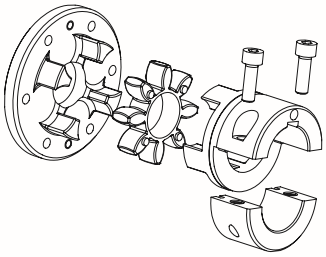

Ordering example:	ROTEX® 38	CF	92 ShA	1	GJL	Ø20
	Coupling size	Type	Spider hardness	Hub side, component	Material	Finish bore

ROTEX® ZR
Flexible jaw couplings

Intermediate shaft programme

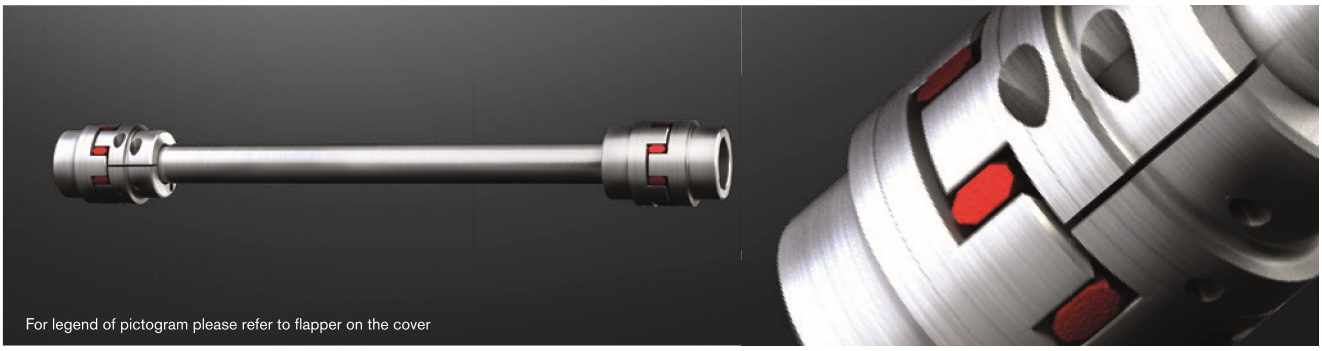

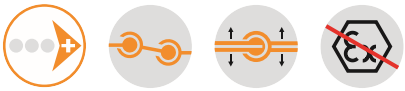

Components

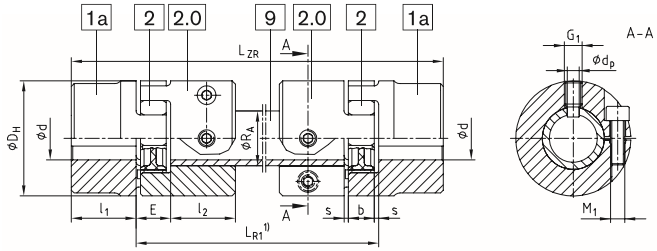

Type ZR
(with GS spider)

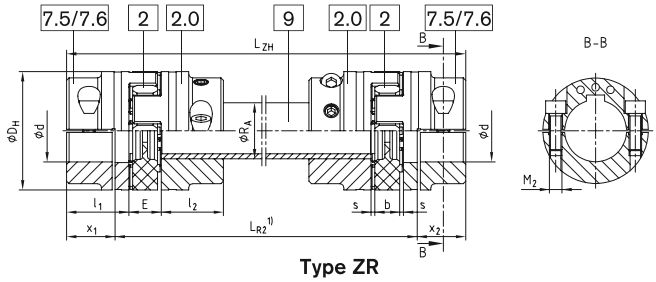

Type ZR
(with GS spider and clamping hubs type DH for a double-cardanic connection 7.5 or 7.6)

ROTEX® Type ZR																					
Size	Max. finish bore d		Dimensions [mm]						Intermediate pipe Torsional stiffness/m		Clamping screw component 2.0		Clamping screw component 7.5/7.6		L_{ZR}, L_{ZH}	min. L_{R1}	min. L_{R2}	Locking screw G_1	Cone bore d_p [mm]	Axial displacement [mm]	Angular displacement [degree]
	Component 1a	Component 7.5/7.6	D_H	l_1, l_2	x_1, x_2	E	s	b	R_A	C [2] [Nm²/rad]	M_1	T_A [Nm]	M_2	T_A [Nm]							
19	25	20	40	25	17.5	16	2.0	12	Ø20x3	954.9	M6	14	M6	10	$L_{R1} + 2 \bullet l_1$ / $L_{R2} + 2 \bullet x_1/x_2$	110	97	M6	4.0	1.2	0.9
24	35	28	55	30	22.5	18	2.0	14	Ø30x4	4522	M6	14	M6	14		128	111	M8	5.5	1.4	0.9
28	40	38	65	35	25.5	20	2.5	15	Ø35x4	7611	M8	35	M8	35		145	129	M10	7.0	1.5	0.9
38	48	45	80	45	35.5	24	3.0	18	Ø40x4	11870	M8	25	M8	35		180	157	M12	8.5	1.8	1.0
42	55	55	95	50	39.0	26	3.0	20	Ø45x4	17487	M10	49	M10	69		198	174	M12	8.5	2.0	1.0
48	62	60	105	56	45.0	28	3.5	21	Ø50x4	24648	M12	86	M12	120		217	190	M16	12	2.1	1.1
55	74	70	120	65	50.0	30	4.0	22	Ø55x4	33544	M12	120	M12	120		242	220	M16	12	2.2	1.1
65	80	80	135	75	60.0	35	4.5	26	Ø65x5	68329	M12	120	M12	120		281	250	M16	12	2.6	1.2
75	95	90	160	85	67.5	40	4.0	30	Ø75x5	108000	M16	295	M16	295		318	285	M16	12	3.0	1.2

[1] With inquiries and orders please specify the shaft distance dimension L_{R1}/L_{R2} along with the maximum speed to review the critical bending speed.
[2] Torsion spring stiffness with an intermediate pipe having a length of 1 m
Finish bore according to ISO fit H7, feather keyway according to DIN 6885, sheet 1 [JS9].
Friction torques of clamping hubs have to be considered.
Please order dimension sheet M 583613.

Not permissible for crane and hoist drives

Diagramme for coupling selection:

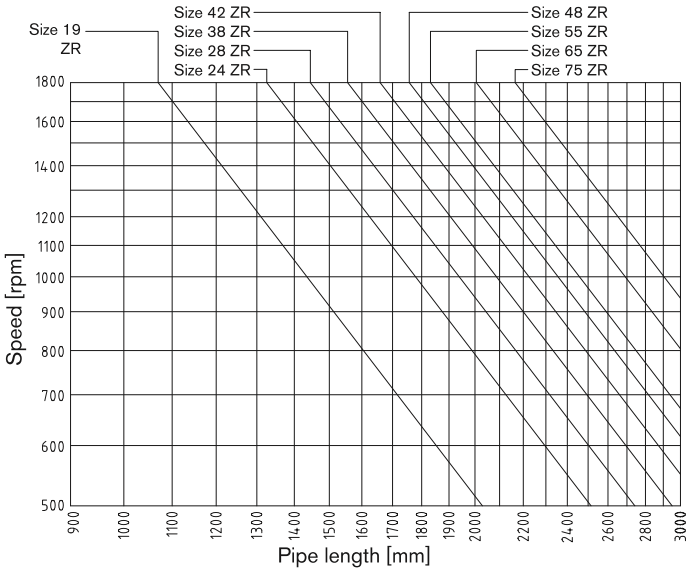

Ordering example:	ROTEX® 38	ZR	1200	98 ShA-GS	7.5	Ø38	7.5	Ø30
	Coupling size	Type	Shaft distance dimension L_{R1}/L_{R2}	Spider hardness	Hub type	Finish bore	Hub type	Finish bore

ROTEX® BTAN and SBAN
Flexible jaw couplings

With brake drum/with brake disk

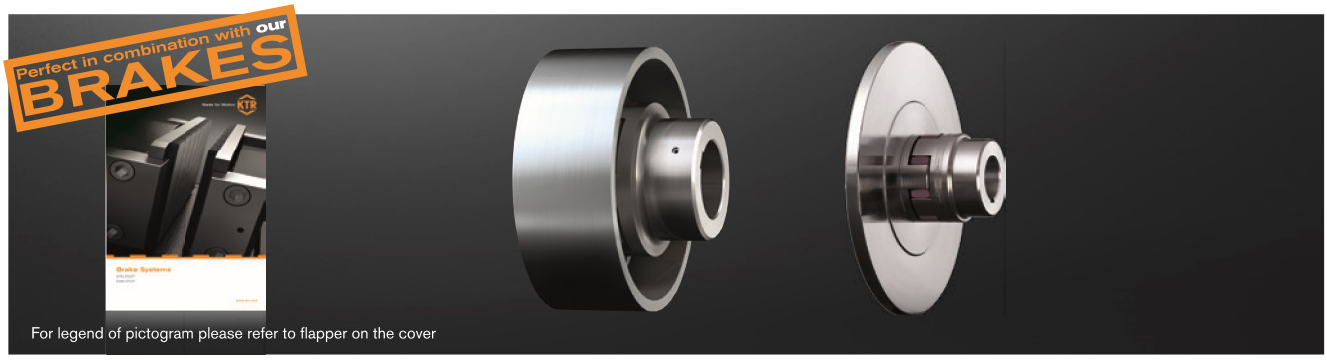

ROTEX® Type BTAN and SBAN														
Size	Pilot bore, d, D, D_1	Max. finish bore d_1		Dimensions [mm]										
		GJS	Steel	D_H	D_2	D_4	d_H	z	pitch [1]	M	T_A [Nm]	l_1, l_2	E	L
38	See jaw couplings on page 34 to 36 / For stock programme / basic programme see page 32 and 33	—	35	80	50	66	38	8	8 x 45°	M8	35	45	24	114
42		—	45	95	60	80	46	12	16 x 22.5°	M8	41	50	26	126
48		—	50	105	68	90	51	12		M8	41	56	28	140
55		—	58	120	78	102	60	8	8 x 45°	M10	83	65	30	160
65		—	68	135	92	116	68	12	16 x 22.5°	M10	83	75	35	185
75		—	78	160	106	136	80	15		M12	120	85	40	210
90		—	100	200	140	172	100	15		M16	295	100	45	245
100		100	—	225	156	195	113	15	20 x 18°	M16	295	110	50	270
110		110	—	255	176	218	127	15		M20	580	120	55	295
125		130	—	290	204	252	147	15		M20	580	140	60	340

Type BTAN												Type SBAN											
Brake drum	ROTEX® BTAN dimension „C“										Speed rpm [V] (30 m/s)	Brake disk	ROTEX® SBAN dimension “N”										Speed rpm [V] (30 m/s)
	38	42	48	55	65	75	90	100	110	125			38	42	48	55	65	75	90	100	110	125	
160x60	14										3550	200x12.5	31.25										2800
200x75	9	12	17	24							2800	250x12.5	31.25	34.25	39.25								2240
250x95	1	4	9	16	25	33					2240	315x16		32.5	37.5	44.5	53.5	61.5					1800
315x118		-5	0	7	16	24	36				1800	400x16			37.5	44.5	53.5	61.5	73.5	81.5	88.5		1400
400x150		-18	-13	-6	3	11	23	31	38		1400	500x16				44.5	53.5	61.5	73.5	81.5	88.5	104.5	1120
500x190					-12	-4	8	16	23	39	1120	630x20					51.5	59.5	71.5	79.5	86.5	102.5	900
630x236						-22	-10	-2	5	21	900	710x20					51.5	59.5	71.5	79.5	86.5	102.5	800
710x265								-13	-6	10	800	800x25							69	77	84	100	710
800x300										-4	710	900x25									84	100	630

[1] Thread in the hub between the cams.
Other sizes on request according to dimension sheet:
BTAN: M380821
SBAN straight: M380822; cranked: M 370065
FNN hub: M 380823
Finish bore according to ISO fit H7, feather keyway according to DIN 6885, sheet 1 [JS9].

Ordering example:	ROTEX® 38	BTAN	Ø200x75	98 ShA	1Nd	Ø34	1	Ø30
	Coupling size	Type	Brake drum Ø x width	Spider hardness	Component	Finish bore	Component	Finish bore

Components

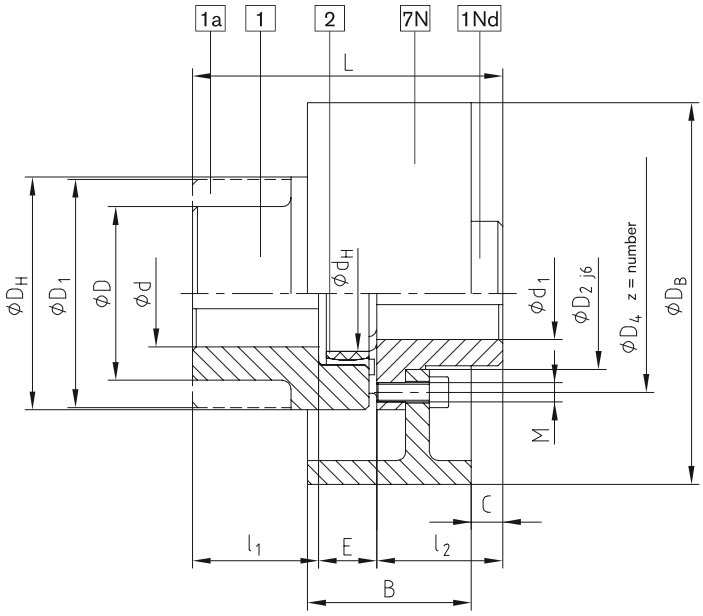

Brake drum
Type BTAN

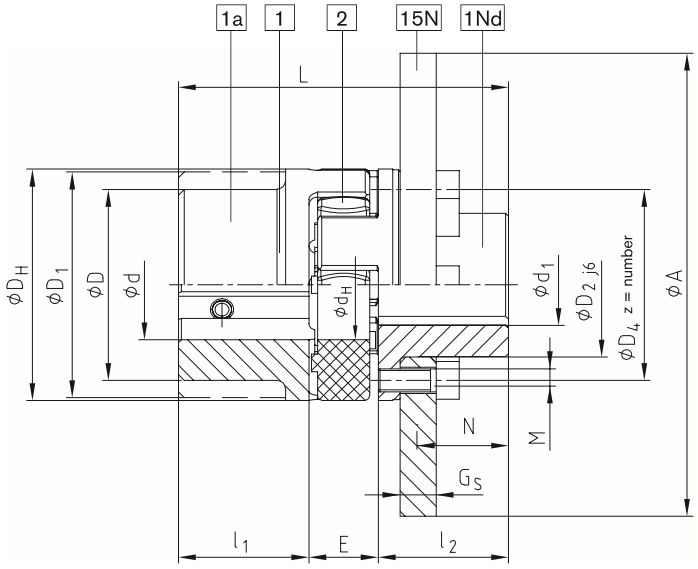

Brake disk
Type SBAN

Drop-out center design coupling with brake disk

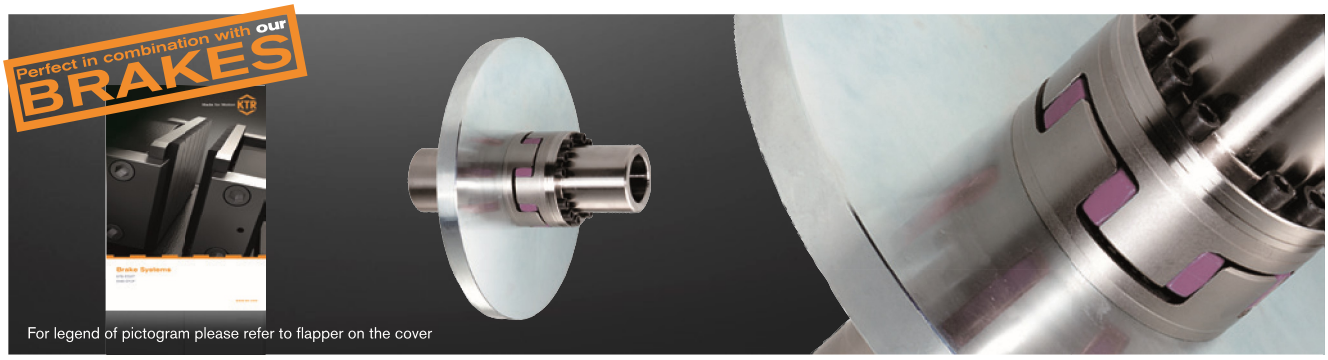

Components

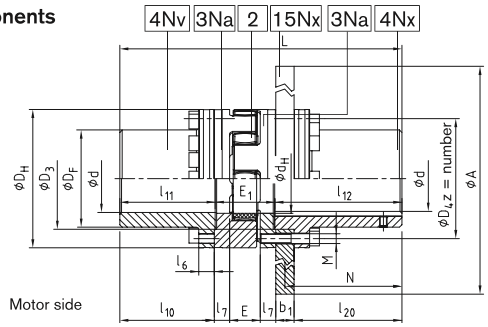

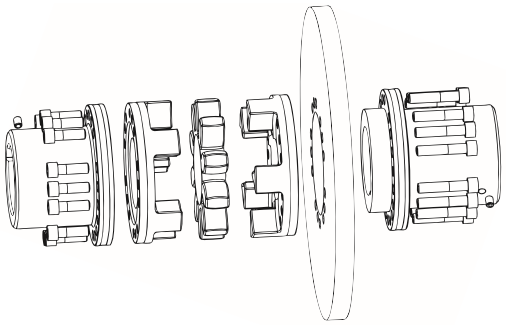

ROTEX® Type AFN-SB special													
Size	Finish bore d		Dimensions [mm]										
	Min.	Max.	D_H	D_F	D_3 H7/h7	D_4	d_H	E	E_1	M	z	Pitch	T_A [Nm]
65	22	70	135	94	96	116	68	35	65	M10	12	16x22.5°	83
75	30	80	160	108	112	136	80	40	75	M12	15		120
90	40	105	200	142	145	172	100	45	82	M16	15		295
100	46	115	225	158	165	195	113	50	97	M16	15		295
110	60	130	255	178	180	218	127	55	103	M20	15	20x18°	580
125	60	150	290	206	215	252	147	60	116	M20	15		580
140	60	170	320	235	245	282	165	65	128	M20	15		580
160	80	200	370	270	280	325	190	75	146	M24	15		1000
180	85	230	420	315	330	375	220	85	159	M24	18	24x15°	1000

ROTEX® Type AFN-SB special											
Size	Torque with 98 ShA [1]		Max. speed [rpm]	Max. braking torque [2] [Nm]	Dimensions [mm]						
	T_{KN}	$T_{K\,max}$			l_7	l_{10}	l_{11}	l_{12}	l_{20}	N	L
65	940	1880	3450	1880	16	112.5	113.5	166.0	135	150	344.5
75	1920	3840	3250	3840	19	131.5	133.0	166.5	135	150	374.5
90	3600	7200	3000	7200	20	164.0	165.5	206.5	175	190	454.0
100	4950	9900	2800	9900	25	153.5	155.0	206.5	175	190	458.5
110	7200	14400	2600	14400	26	201.5	203.5	212.0	180	195	518.5
125	10000	20000	2250	20000	30	198.5	200.5	212.0	180	195	528.5
140	12800	25600	1800	25600	34	244.5	247.0	252.5	220	235	627.5
									210 [3]	230 [3]	
160	19200	38400	1500	38400	38	226.5	229.0	252.5	220	235	627.5
									210 [3]	230 [3]	
180	28000	56000	1350	56000	40	195.0	198.0	252.5	220	235	609.5

ROTEX® Selection of coupling/brake disk											
Size	Brake disk ØA x b_1										
	355x30	400x30	450x30	500x30	560x30	630x30	710x30	800x30	900x30	900x40	1000x40
65	x	x	x								
75		x	x	x							
90			x	x	x	x					
100				x	x	x					
110				x	x	x	x				
125						x	x	x			
140							x	x	x	x	x
160							x	x	x	x	x
180							x	x	x	x	x

[1] For selection see page 14 et seqq. [2] The maximum braking torque must not exceed the maximum torque of the coupling. [3] Dimensions with a width of brake disk b_1 of 40 mm.

Ordering example:

ROTEX® 90	AFN-SB special	Ø450x30	98 ShA	4Nv	Ø90	4Nx	Ø90
Coupling size	Type	Brake disk Ø x width	Spider hardness	Component	Finish bore	Component	Finish bore

ROTEX® SD
Flexible jaw couplings

Shiftable coupling shiftable at standstill

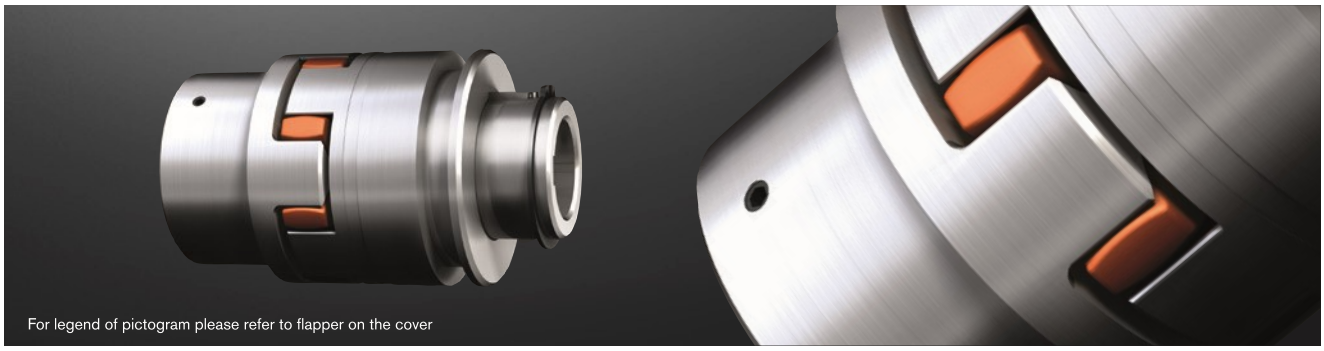

Components

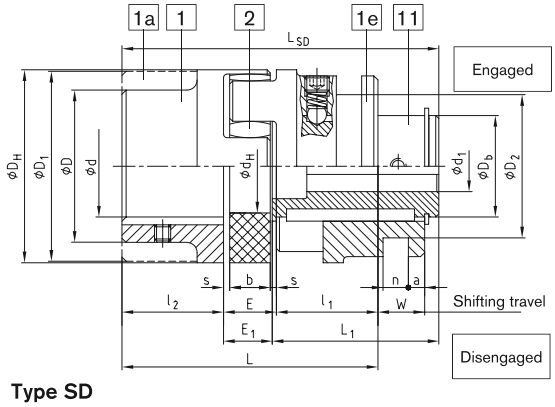

Type SD

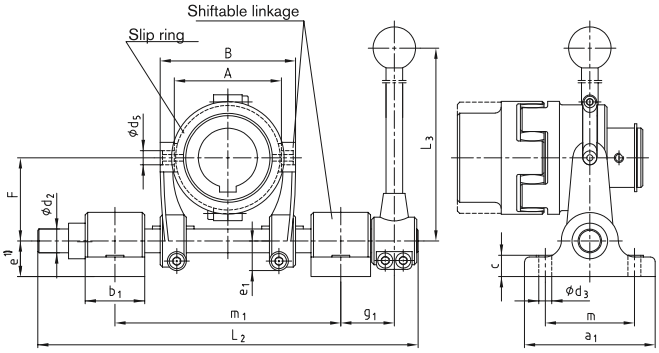

Type SD with slip ring and shiftable linkage

Upon request: Shiftable linkage available with locking pin, locking device and retrieval of shift position.

ROTEX® Type SD

Size	d, D, D_1	Finish bore d_1 Min.	Finish bore d_1 Max.	D_H	D_2±0,1	Db	d_H	l_1, l_2	E	s	b	E_1	L	L_1	W	a	n ±0,1	L_{SD}	Shifting force set in [N]	Slip ring size	Shiftable linkage size
24	See jaw couplings on page 34 to 36 For stock programme / basic programme see page 32 and 33	8	20	55	41	30	27	30	18	2.0	14	16.5	78	51.5	16.0	6	6.0	98	110	—	—
28		10	24	65	58	36	30	35	20	2.5	15	18.0	90	60.0	17.5	8	8.0	113	130	—	—
38		12	30	80	70.5	45	38	45	24	3.0	18	22.0	114	73.0	21.0	8	12.5	140	150	1.1	1
42		14	35	95	70.5	50	46	50	26	3.0	20	24.0	126	82.0	23.0	8	12.5	156	180	1.1	1
48		15	42	105	89.5	60	51	56	28	3.5	21	25.5	140	90.5	24.5	6	17.5	172	200	2.2	2
55		18	50	120	112.5	70	60	65	30	4.0	22	27.0	160	103.0	26.0	6	18.0	195	250	3.3	3
65		20	55	135	112.5	80	68	75	35	4.5	26	32.0	185	120.0	30.5	7	18.0	227	280	3.3	3
75		25	65	160	130.5	95	80	85	40	5.0	30	37.0	210	135.0	35.0	6	20.5	257	350	4.4	3
90		28	75	200	164.5	110	100	100	45	5.5	34	41.0	245	152.0	39.5	8	25.5	293	350	5.5	4
100		30	80	225	164.5	115	113	110	50	6.0	38	46.0	270	169.0	44.0	14	25.5	325	380	5.5	4
110		35	85	255	164.5	125	127	120	55	6.5	42	51.5	295	184.0	48.5	18.5	25.5	355	450	5.5	4
125		40	100	290	210.5	145	147	140	60	7.0	46	55.5	340	208.5	53.0	18.5	30.5	404	500	6.6	5

Slip ring and shiftable linkage

Size	Size of shiftable linkage	a_1	b1	c	d_2	d_3	d_5	e [1)]	e_1	F	g_1	L_2	L_3	m	m_1 min.	m_1 max.	A	B	Max. speed [rpm] for slip ring
38	1	110	50	18	20	11	12	30	25	70	55	320	400	75	180	190	90	114	3280
42	1																		
48	2	140	60	25	25	13.5	17	40	27	97.5	60	430	450	100	240	270	111	151	2550
55	3				30				32.5	120	70	490	600		280	310	140	180	2120
65	3																		
75	3																170	210	1710
90	4	160			35		21	50	37.5	147.5	70	565	750	120	321	365	200	244	1360
100	4																		
110	4																		
125	5				40		25		46	190	80	630	1085		365	410	250	300	855

[1)] With a through base plate dimension „e" of the shiftable linkage size 5 to be increased by at least 10 mm.
Finish bore according to ISO fit H7, feather keyway according to DIN 6885, sheet 1 [JS9].

Ordering example:	ROTEX® 38	SD	With 1.1 and 1	98 ShA	1	Ø38	11	Ø28
	Coupling size	Type	With slip ring 1.1 and shiftable linkage 1	Spider hardness	Component	Finish bore	Component	Finish bore

For mounting of fan

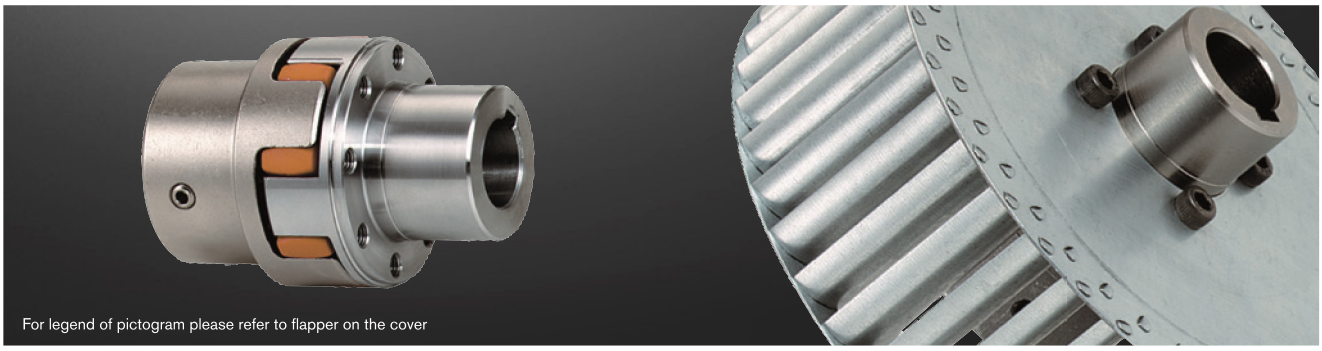

Components

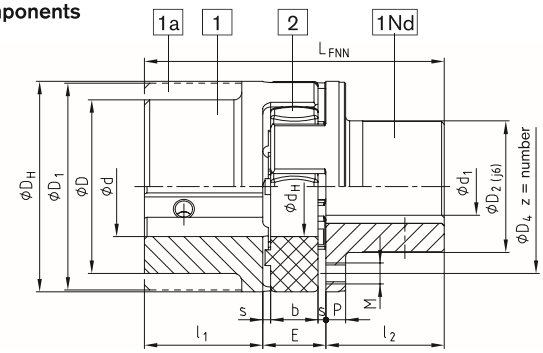

Type FNN

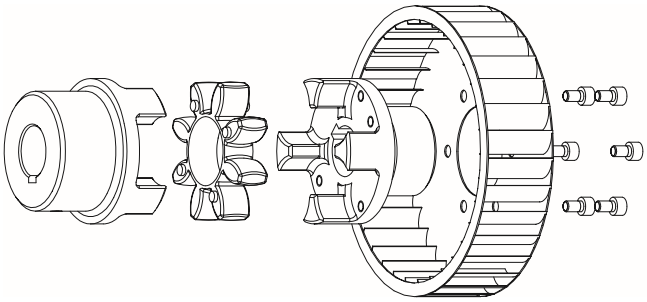

Type FNN with fan (type 1)

ROTEX® Type FNN															
Size	d, D, D_1	Max. finish bore d_1	Dimensions [mm]												
			D_H	D_2	D_4	d_H	E	s	b	l_1, l_2	P	M	z	Pitch	L_{FNN}
28	See jaw couplings on page 34 to 36 For stock programme / basic programme see page 32 and 33	28	65	40	54	30	20	2.5	15	35	6.5	M6	8	8x45°	90
38		35	80	50	66	38	24	3.0	18	45	7.5	M8	8		114
42		42	95	60	80	46	26	3.0	20	50	9.5	M8	12	16x22.5°	126
48		50	105	68	90	51	28	3.5	21	56	10.5	M8	12		140
55		55	120	78	102	60	30	4.0	22	65	12.5	M10	8	8x45°	160
65		65	135	92	116	68	35	4.5	26	75	13.5	M10	12	16x22.5°	185
75		75	160	106	136	80	40	5.0	30	85	15.5	M12	15	20x18°	210
90		100	200	140	172	100	45	5.5	34	100	18.5	M16	15		245

Other sizes on request.

Type 1: Fan screwed on
The ROTEX® hub can be supplied with the fan screwed on. Customised connection dimensions such as pitch circle of threads, size of threads and number or centering of fans must be specified in your inquiry.

Type 2: Fan injection-moulded
Low prices due to optimisation of production with bigger volumes.

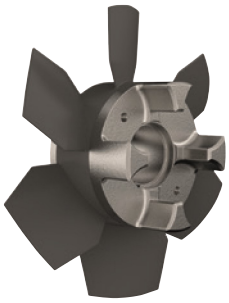

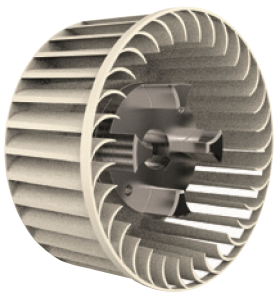

Ordering example:	ROTEX® 38	FNN	92 ShA	1	Ø38	1Nd	Ø30
	Coupling size	Type	Spider hardness	Component	Finish bore	Component	Finish bore

Other types with clamping sets

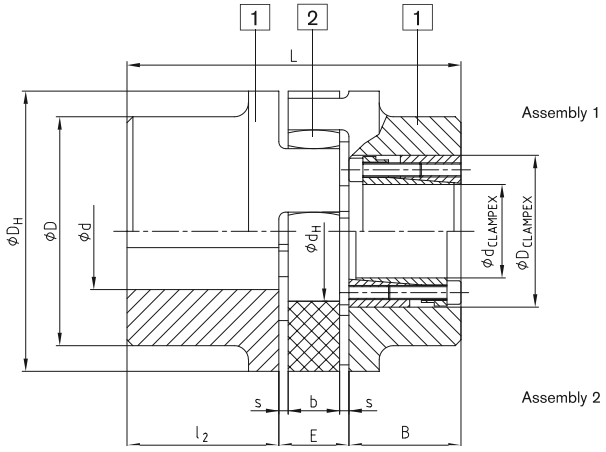

Components

ROTEX® with clamping set CLAMPEX® KTR 200														
Size	d, D, D_1	Hub material	CLAMPEX® KTR 200			B	Dimensions [mm]							
			Max. size of KTR clamping set dxD	Transmittable torque and axial force										
				T [Nm]	F_{AX} [kN]		l_2	E	s	b	D_H	D	d_H	L
42	See jaw couplings on page 34 to 36 For stock programme / basic programme see page 32 and 33	Steel Component 1	30x55	790	53	48	50	26	3.0	20	95	—	46	Length = l_2+ E + B (clamping set)
48			35x60	1300	74	48	56	28	3.5	21	105	—	51	
55			45x75	2200	98	59	65	30	4.0	22	120	—	60	
65			45x75	2200	98	59	75	35	4.5	26	135	115	68	
75			50x80	3330	132	59	85	40	5.0	30	160	135	80	
90			65x95	4300	132	59	100	45	5.5	34	200	160	100	
100		GJS Component 1	65x95	4300	132	59	110	50	6.0	38	225	180	113	
110			70x110	7500	214	70	120	55	6.5	42	255	200	127	
125			80x120	8500	213	70	140	60	7.0	46	290	230	147	
140			95x135	12600	265	70	155	65	7.5	50	320	255	165	
160			110x155	16500	300	80	175	75	9.0	57	370	290	190	
180			120x165	22500	375	80	195	85	10.5	64	420	325	220	

Type 4.2 with CLAMPEX® clamping set KTR 250

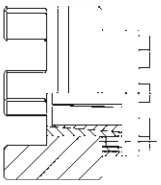

Frictionally engaged, backlash-free shaft-hub-connection for transmitting average torques.

Type 4.3 with CLAMPEX® clamping set KTR 400

Frictionally engaged, backlash-free shaft-hub-connection for transmitting bigger torques. Maximum size of clamping set depends on the hub collar diameter. Clamping set screw fitting possible both internally and externally. For details of calculation see CLAMPEX® catalogue.

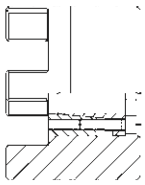

For CLAMPEX® programme see page 280 to 315 .

Other types with torque limiters

ROTEX® BKN - Overload coupling, type BKN

- Torsionally flexible coupling ROTEX® with shear pin
- Load-separating with blockage/overload
- Easy replacement of shear pin
- Fracture torque to be defined individually depending on the application

Customer variant from the stock programme.
Please specify the fracture torques with your order!
For further details see dimension sheet No. 5020/000/009-760313

ROTEX® - RUFLEX® - Overload coupling

- High power density
- Large wear volume with long service life
- Easy assembly and torque setting

For further details see catalogue page 250

ROTEX® - KTR-SI - Overload coupling

- Available in a ratchet, synchronous, idle rotation and fail-safe design
- High response accuracy, even after a long operating period
- Maintenance-free

For further details see catalogue page 257

ROTEX® - KTR-SI FRE - idle rotation overload coupling

- Idle rotation overload system for high torques
- High repeatability
- Intelligent further development towards the shear pin coupling and hydraulic clamping sets

For further details see catalogue page 259

Weights and mass moments of inertia

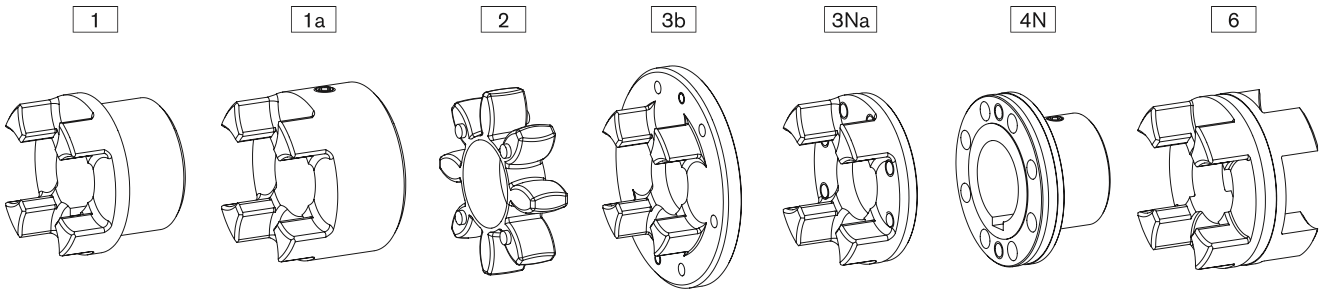

ROTEX® individual components

Size	Standard hub				Large hub			Spider	Driving flange			Coupling flange	DKM spacer
	Component 1				Component 1a			Compo-nent 2	Component 3b	Component 3Na		Component 4N	Compo-nent 6
	Aluminium [kg] [kgm²]	GJL [kg] [kgm²]	GJS [kg] [kgm²]	St [kg] [kgm²]	Aluminium [kg] [kgm²]	GJL [kg] [kgm²]	St [kg] [kgm²]	Polyurethane (Vulkollan) [kg] [kgm²]	GJS [kg] [kgm²]	St [kg] [kgm²]	GJS [kg] [kgm²]	St [kg] [kgm²]	Aluminium [kg] [kgm²]
14	—	—	—	—	0.020	—	—	0.0044	—	—	—	—	—
	—	—	—	—	0.000003	—	—	0.0000005	—	—	—	—	—
19	0.064	—	—	—	0.074	—	0.25	0.0057	—	—	—	—	—
	0.00001	—	—	—	0.00002	—	0.00006	0.000001	—	—	—	—	—
24	0.123	—	—	—	0.174	—	0.55	0.014	0.028	0.145	—	0.30	0.14
	0.00004	—	—	—	0.00008	—	0.00023	0.000006	0.00023	0.00007	—	0.00009	0.00006
28	0.200	—	—	—	0.264	—	0.89	0.024	0.54	0.232	—	0.49	0.22
	0.00010	—	—	—	0.00019	—	0.00053	0.00001	0.0007	0.00017	—	0.0002	0.00013
38	0.44	1.16	—	1.6	0.470	1.32	1.74	0.042	0.73	—	0.313	0.87	0.35
	0.00033	0.00086	—	0.00151	0.00046	0.00135	0.00155	0.00004	0.001	—	0.00038	0.0005	0.00035
42	0.69	1.75	—	2.44	0.772	2.05	2.74	0.065	1.26	—	0.608	1.4	0.47
	0.00067	0.00178	—	0.00281	0.00111	0.00291	0.00343	0.00008	0.0032	—	0.00089	0.0011	0.00068
48	0.80	2.44	—	3.34	1.01	2.78	3.72	0.086	1.45	—	0.755	1.92	0.62
	0.0012	0.00308	—	0.00473	0.00174	0.00484	0.00570	0.00013	0.0043	—	0.001358	0.0018	0.0011
55	—	3.68	—	5.05	—	4.08	5.57	0.11	2.58	—	1.243	2.93	0.90
	—	0.00615	—	0.00948	—	0.00926	0.01193	0.00023	0.0105	—	0.002920	0.0037	0.0021
65	—	5.67	—	6.79	—	6.04	8.22	0.17	3.10	—	1.635	4.36	1.31
	—	0.01240	—	0.01516	—	0.01789	0.02079	0.00043	0.0149	—	0.004891	0.0069	0.0039
75	—	8.72	—	10.5	—	9.53	14.3	0.32	4.46	—	2.511	6.80	1.97
	—	0.02644	—	0.03269	—	0.03946	0.05069	0.001166	0.0281	—	0.01050	0.0151	0.0082
90	—	14.8	—	18.7	—	18.2	24.0	0.57	6.94	—	4.151	12.84	3.45
	—	0.06730	—	0.08742	—	0.15086	0.13151	0.00326	0.0651	—	0.02723	0.0448	0.0224
100	—	—	19.7	—	—	—	—	0.82	10.2	—	6.350	16.16	—
	—	—	0.11694	—	—	—	—	0.00592	0.1165	—	0.05273	0.0798	—
110	—	—	27.4	—	—	—	—	1.14	—	—	8.578	21.35	—
	—	—	0.20465	—	—	—	—	0.01048	—	—	0.09121	0.2824	—
125	—	—	42.3	—	—	—	—	1.56	—	—	12.598	34.33	—
	—	—	0.40727	—	—	—	—	0.01878	—	—	0.17469	0.3229	—
140	—	—	58.1	—	—	—	—	2.02	—	—	17.271	48.69	—
	—	—	0.67739	—	—	—	—	0.02989	—	—	0.29247	0.4917	—
160	—	—	84.2	—	—	—	—	3.08	—	—	26.305	71.08	—
	—	—	1.31729	—	—	—	—	0.06049	—	—	0.59436	0.9693	—
180	—	—	118.5	—	—	—	—	5.04	—	—	33.076	109.43	—
	—	—	2.30835	—	—	—	—	0.13295	—	—	0.97394	1.9650	—

Weight and mass moment of inertia each refer to the average finish bore without feather keyway.

Weights and mass moments of inertia

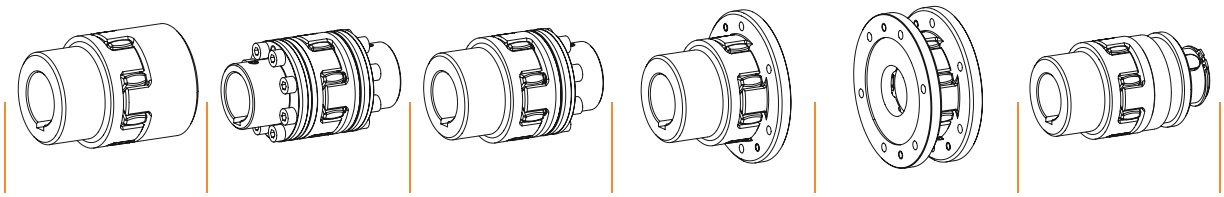

ROTEX® Complete coupling types												
Size	Standard		AFN		BFN		CF		DF		SD	
	Weight [kg]	Mass moment of inertia J [kgm²]	Weight [kg]	Mass moment of inertia J [kgm²]	Weight [kg]	Mass moment of inertia J [kgm²]	Weight [kg]	Mass moment of inertia J [kgm²]	Weight [kg]	Mass moment of inertia J [kgm²]	Weight [kg]	Mass moment of inertia J [kgm²]
19	0.51	0.000121	–	–	–	–	0.44	0.00016	0.38	0.00020	0.42	0.00008
24	1.1	0.000466	0.98	0.00036	1.1	0.00041	0.84	0.00047	0.57	0.00047	1.1	0.00046
28	1.8	0.00107	1.6	0.00083	1.7	0.00095	1.5	0.00124	1.1	0.00141	1.9	0.00106
38	2.5	0.00171	2.8	0.00209	2.6	0.00193	1.9	0.00217	1.5	0.00259	3.0	0.00435
42	3.9	0.00476	4.5	0.00472	4.1	0.00419	3.1	0.00513	2.6	0.00662	4.4	0.00804
48	5.3	0.00805	5.9	0.00736	5.5	0.00684	3.9	0.00755	3.0	0.00881	6.2	0.00223
55	7.9	0.01564	8.9	0.01480	8.3	0.01369	6.4	0.01692	5.3	0.02131	9.8	0.0166
65	11.9	0.03071	12.9	0.0266	12.3	0.0259	8.9	0.02780	6.4	0.003037	14.9	0.0326
75	18.6	0.06706	20.6	0.0601	19.3	0.0572	13.5	0.0557	9.2	0.05741	23.2	0.0706
90	33.6	0.22139	37.8	0.1718	34.2	0.1551	22.3	0.1356	14.5	0.1333	40.5	0.1891
100	40.2	0.23976	49.6	0.3068	45.2	0.2737	30.9	0.2401	21.2	0.2394	46.7	0.2467
110	56.0	0.42027	67.5	0.5385	61.7	0.4793	42.9	0.4324	29.8	0.4446	61.5	0.4186
125	86.2	0.83426	102.6	1.0485	94.4	0.9413	64.4	0.8187	42.2	0.8031	96.8	0.8497
140	118.3	1.38607	141.2	1.743	129.7	1.564	90.4	1.4221	62.5	1.4580	127.8	1.368
160	171.6	2.69781	210.3	3.517	190.9	3.107	127.6	2.589	83.6	2.4805	190.3	2.723
180	242.25	4.75449	306.6	6.582	274.4	5.668	175.1	4.448	107.9	4.141	262.2	4.810

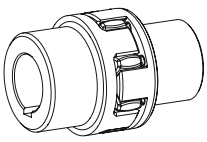

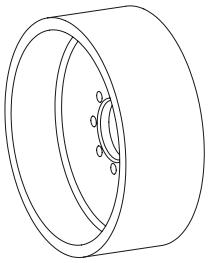

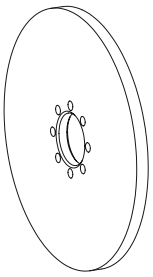

BTAN/SBAN without drum/disk		
Size	Weight [kg]	Mass moment of inertia J [kgm²]
28	0.90	0.0004
38	2.10	0.0014
42	3.24	0.0031
48	4.41	0.0053
55	6.60	0.0105
65	10.1	0.0209
75	15.4	0.0442
90	27.6	0.1224
100	36.9	0.2074
110	50.9	0.3665
125	79.1	0.7349
140	109.0	1.2292
160	161.9	2.4569
180	232.9	4.4967

Brake drum for BTAN [1)]		
Brake drum $ØD_B$ x B	Weight [kg]	Mass moment of inertia J [kgm²]
160 x 60	2.12	0.01
200 x 75	3.45	0.03
250 x 95	6.87	0.08
315 x 118	14.95	0.28
400 x 150	31.20	0.89
500 x 190	60.00	2.70
630 x 236	112.00	8.01
710 x 265	161.00	14.9
800 x 300	202.00	27.2

Brake disk for SBAN [1)]		
Brake disk ØA x G_S	Weight [kg]	Mass moment of inertia J [kgm²]
200 x 12.5	2.928	0.015367
250 x 12.5	4.662	0.037584
315 x 16	8.618	0.111829
400 x 16	15.230	0.315206
500 x 16	23.964	0.769963
630 x 20	47.716	2.426359
710 x 20	60.934	3.915100
800 x 25	94.913	7.878998
900 x 25	118.954	12.609089
1000 x 25	**148.240**	**19.234941**